Drinking Water Fact-Finding Panel for Camp Lejeune

Report to the Commandant
United States Marine Corps
October 6, 2004

Drinking Water Fact-Finding Panel
For Camp Lejeune

1530 Wilson Blvd., Suite 100
Arlington, VA 22209
703.526.2452

Honorable Ronald C. Packard, Chairman

Jerome B. Gilbert, P.E.

General Richard D. Hearney, USMC Retired

Honorable Robert B. Pirie, Jr.

Robert G. Tardiff, Ph.D.

October 6, 2004

General Michael W. Hagee, USMC
Commandant of the Marine Corps
HQ, USMC 2 Navy Annex
Washington, D.C. 20380-1775

Dear General Hagee,

Pursuant to your charter issued March 18, 2004, the Drinking Water Fact-Finding Panel for Camp Lejeune has completed an independent review of the facts surrounding the decisions made following the 1980 discovery of volatile organic compounds in drinking water at Marine Corps Base Camp Lejeune.

The Panel herewith submits its report.

The Marine Corps cooperated fully with the Panel, and we operated with complete independence throughout our review.

We hope that our report is useful in helping the Marine Corps and former Camp Lejeune better understand the actions and decisions related to the discovery of contamination in some drinking water wells at the base in the context of 1980-1985.

Sincerely,

Ronald C. Packard
Chair

Enclosure: Report to the Commandant

TABLE OF CONTENTS

1. INTRODUCTION 1

1.1 Document Collection 4
1.2 Personal Interviews 5
1.3 Solicitation of Concerned Citizen Comments 6
1.4 Body of Evaluated Information 6
1.5 Review process 7

2. HISTORICAL PERSPECIVE 9

2.1 Industrial Uses of TCE and PCE 9
2.2 Use of TCE and PCE at/near Camp Lejeune 10
2.3 Regulatory Framework 10
2.3.1 National Interim Primary Drinking Water Regulations (1975–1980) 11
2.3.2 Suggested No Adverse Response Levels for TCE and PCE (1979–1980) 12
2.3.3 National Primary Drinking Water Regulations for TCE and PCE (SDWA, 1982–1992) 13
2.4 Development of Toxicity Data for TCE and PCE 14
2.4.1 Trichloroethylene 14
2.4.2 Tetrachloroethylene 16
2.4.3 Development of RMCLs for TCE and PCE 17
2.5 Water Supply Industry Practice: 1980–1985 18
2.5.1 EPA and the Water Supply Industry 18
2.5.2 Small Community Water Systems and NIPDWRs 21
2.6 AWWA's Response to the ANPRM for Phase I VOCs 22
2.7 Drinking Water Regulation in California: 1980–1985 23
2.8 VOCs at Camp Pendleton: 1980–1985 23
2.9 Summary 24

3. FINDINGS ON USMC ACTIVITIES AT CAMP LEJEUNE 26

3.1 Camp Lejeune Drinking Water System 26

3.2 USMC Environmental Organization Structure.....28

3.3 Camp Lejeune Environmental Initiatives 29

3.3.1 Camp Lejeune TTHM Sampling and Analysis (1980).....29

3.3.2 Camp Lejeune TTHM Sampling and Analysis (1982–1983).....32

3.3.3 Camp Lejeune Response Actions: Hadnot Point and Tarawa Terrace 35

3.4 Detailed Findings 40

Figures

Figure 1. Summary of Contaminated Wells 28

Figure 2. Notes of 1980–1981 Hadnot Point TTHM Analyses.....30

Figure 3. Spring 1982 Sampling Data.....34

Attachments

Attachment A. Charter for Drinking Water Fact-Finding Panel for Camp Lejeune

Attachment B. Panelist Summary Biographies

Attachment C. Timeline of Events

Attachment D. Summary of Key Analytical Data

Attachment E. List of Persons Interviewed

Attachment F. List of Speakers at June 24-25 Public Meeting

Attachment G. Summary Table of Documents Collected

Attachment H. Camp Lejeune Water Distribution Systems (3)

Attachment I. Hadnot Point Drinking Water System Schematic

Attachment J. Holcomb Boulevard Drinking Water System Schematic

Attachment K. Summary of Drinking Water Well Data

Attachment L. Base Organization Chart (pre-October 1982)

Attachment M. Base Organization Chart (post-October 1982)

Attachment N. Preventive Medicine Reporting Chain

Attachment O. List of Acronyms

Attachment P. Bibliography

EXECUTIVE SUMMARY

Camp Lejeune began sampling its drinking water system in 1980 in advance of Safe Drinking Water Act (SDWA) regulations that would set limits for total trihalomethanes (TTHMs) in drinking water. TTHMs are disinfection byproducts of the chlorination process that were suspected of causing cancer. In October 1980, laboratory analyses for TTHMs indicated the presence of volatile organic compounds (VOCs) other than TTHMs in Camp Lejeune's Hadnot Point drinking water system. Additional TTHM analyses in 1981 also indicated the presence of VOCs at Hadnot Point. In August 1982, analyses of samples from the Hadnot Point and Tarawa Terrace drinking water systems identified varying concentrations of specific VOCs — trichloroethylene (TCE) and tetrachloroethylene (PCE). TCE is a degreaser that was widely used in equipment maintenance, and PCE is commonly used in dry-cleaning operations.

The Marine Corps conducted systematic sampling of drinking water wells at Camp Lejeune in 1984 as part of a new Navy environmental program. This sampling identified VOCs in the drinking water at some locations and lead Camp Lejeune to close ten wells in late 1984 and early 1985. To establish a historical record of events and decisions associated with Camp Lejeune's water contamination issue and take into account the concerns of former base residents who believe they or their family members have experienced adverse health effects from exposure to VOCs in the water, the Marine Corps is focusing its efforts on two questions:

1. Who was exposed to VOCs, and what are the health effects resulting from those exposures?
2. Did the Marine Corps take appropriate actions between 1980, when VOCs were first identified in the base's Hadnot Point drinking water system, and 1985, when the wells were closed?

To answer question 2 and determine if Camp Lejeune leadership took appropriate actions, the Marine Corps established the Drinking Water Fact-Finding Panel for Camp Lejeune (the Panel). This report describes the Panel's efforts between April 1 and September 30, 2004, and its findings. The Panel reviewed primarily information from the 1980–1985 timeframe; however it was not precluded from reviewing information from outside this time period. The Panel was neither chartered nor qualified to investigate claims of health effects of VOCs on former Camp Lejeune residents who consumed contaminated water and, therefore, makes no judgments about such claims.

To address question 1, the Marine Corps is supporting the Agency for Toxic Substances and Disease Registry (ATSDR) by providing information for an ongoing epidemiological study.

The Panel initially consisted of three core members but was subsequently expanded to include two panelists having specific scientific and water engineering expertise. The Panel has combined expertise in the operation and management of military facilities, the policies and operations of water treatment and distribution systems, the analytical procedures of water testing laboratories, and chemical toxicology. Booz Allen Hamilton, a management and technical consulting firm, was retained to provide administrative, logistical, and research support to the Panel. The Panel's charter and summary biographies on the Panelists are provided in Attachments A and B, respectively.

The Panel fulfilled its objectives by following several interdependent courses of action: document reviews, personal interviews, solicitation of comments from former residents, literature reviews, and utilization of the Panelists' expertise. Section 1 describes each course of action.

Based on its review and analysis of available information, the Panel found that the situation at Camp Lejeune occurred from a convergence of multiple factors (further elaboration on these factors can be found in Section 3.4):

1. During the period reviewed by the Panel, Camp Lejeune provided drinking water at a level of quality consistent with general water industry practices in light of the evolving regulatory requirements at the time.
2. Camp Lejeune made every effort to comply with existing water quality regulations and related schedules but did not anticipate or independently evaluate health risks associated with chemicals that might be subject to future regulation. In 1980 there was developing concern about potential adverse health effects from exposure to TCE and PCE, and the U.S. Environmental Protection Agency was just beginning to move toward establishing standards by issuing "suggested no-adverse response levels" for these chemicals.
3. Confounding factors that appear to have hindered Camp Lejeune personnel from quickly recognizing the significance of VOC contamination include the following: the absence of regulatory standards, no records of resident complaints about water quality, sampling errors, and inconsistent sampling results of tap water attributable to a multiple-well system that diluted or masked evidence of significant contamination from any one source.

4. Naval Facilities Engineering Command Atlantic Division (LANTDIV), as a technical advisory organization, apparently was not aggressive in providing Camp Lejeune's Environmental Division with the technical expertise necessary to understand the significance of the VOCs and how they could have been addressed.
5. Inadequate funding, staffing, and training of Camp Lejeune's Environmental Division, combined with the Division's compliance-based approach to regulations, contributed to a lack of understanding about the potential significance of the VOCs identified in the groundwater in the early 1980s.
6. Communications among Camp Lejeune's water system operators, the base's Preventive Medicine Department, the Environmental Division, and LANTDIV were inadequate.
7. Communications to Camp Lejeune residents regarding drinking water contamination were not detailed enough to fully characterize the contaminant levels found at the time of the well closures.
8. The Panel found the Marine Corps leadership acted responsibly and saw no evidence of Marine Corps attempts to cover up information that indicated contamination in Camp Lejeune drinking water.

In concluding its charter, the Panel encourages the following:

- The Marine Corps should upgrade environmental and risk communications training provided to base leadership and staff to assure that any future environmental issues are handled more precisely and promptly. The Marine Corps should also be more proactive in following environmental regulation development and water industry practices and provide periodic summaries of new issues to base water supply and environmental staff.
- The Marine Corps should make the information collected by the Panel available to the public.
- The ATSDR should expedite its epidemiological study of possible health effects from contaminated drinking water at Camp Lejeune.

1. INTRODUCTION

The Panel focused its efforts on understanding and reconstructing events and actions relating to Camp Lejeune's water contamination issue during the 1980–1985 period, but also evaluated the series of developments since that time (See Attachment C, Timeline of Events).

Camp Lejeune began sampling its drinking water system in 1980 in advance of Safe Drinking Water Act (SDWA) regulations that would set limits for total trihalomethanes (TTHMs) in drinking water. TTHMs are disinfection byproducts of the chlorination process that were suspected of causing cancer. In October 1980, laboratory analyses for TTHMs indicated the presence of volatile organic compounds (VOCs) other than TTHMs in Camp Lejeune's Hadnot Point water system. Additional TTHM analyses in 1981 also indicated the presence of VOCs at Hadnot Point. In August 1982, analyses of samples from the Hadnot Point and Tarawa Terrace drinking water systems identified varying concentrations of specific VOCs—trichloroethylene (TCE) and tetrachloroethylene (PCE). TCE is a degreaser that was widely used in equipment maintenance, and PCE is commonly used in dry-cleaning operations. Following systemic sampling of drinking waters wells in 1984 as part of a new Navy environmental program, Camp Lejeune closed ten water supply wells in late 1984 and early 1985. (See Attachment D for key sampling data).

At the time that these VOCs were detected, the scientific community and water industry were aware that VOCs in drinking water were a growing concern. The U.S. Environmental Protection Agency (EPA) had not yet issued regulatory standards for TCE and PCE in drinking water; however, it had developed suggested no-adverse response level (SNARL) guidelines for both TCE and PCE. EPA's SNARLs for TCE were set at 2,000 micrograms per liter (µg/L) for 1-day, 200 µg/L for 10-day, and 75 µg/L for a lifetime (70-year) exposure. SNARLs for PCE were set at 2,300 µg/L for 1-day, 175 µg/L for 10-day, and 20 µg/L for lifetime exposure. One microgram per liter (one part per billion) is often described as about the amount of one drop of water in a swimming pool. In its guidelines, EPA also provided a brief description of the toxic properties of each compound. The agency published a proposed rulemaking in 1984 that recommended maximum contaminant levels (MCLs) for TCE and PCE and solicited public comment (EPA 49 *FR* 24330, 1984). Final regulations for MCLs of 5 µg/L were established in 1987 for TCE and in 1989 for PCE.

In October 1989, Camp Lejeune was placed on the Comprehensive Environmental Response, Compensation, and Liability Act (CERCLA, or "Superfund") National Priorities List (NPL) (EPA, 54 *FR* 41000, 1989). By law, ATSDR conducts a public health assessment for sites listed or proposed for the NPL. ATSDR made its initial visit to Camp Lejeune in 1991 as part of its assessment, and the Marine Corps began providing information to the Agency. In the final public health assessment released in 1997, ATSDR determined that exposure to contaminated drinking water was not likely to cause adverse health effects in adults but recommended a study of children whose mothers may have been exposed to VOCs during pregnancy by drinking Camp Lejeune water (ATSDR, 1997). In 1998, ATSDR published its report discussing possible associations between contaminated drinking water at Camp Lejeune and the size and weight of infants born to parents who lived in base housing (ATSDR, 1998). ATSDR then recommended a larger survey of children born between 1968 and 1985 to women who lived at Camp Lejeune during their pregnancy. ATSDR initiated the survey in 1999 and determined there was adequate information to conduct an epidemiological study, which is currently ongoing (ATSDR, 1999).

In March 2004, the Commandant of the Marine Corps released a "Charter for the Fact Finding Panel to Review Issues Surrounding the Camp Lejeune Water Supply from 1980–1985." The Panel began work and held its first meeting in April 2004. As mandated by its Charter, the Panel focused primarily on the period from 1980 to 1985. This timeframe began with the initial detection of VOCs in one Camp Lejeune drinking water system and concluded with the closure of VOC-contaminated wells in two drinking water systems in late 1984 and early 1985.

The Panel's objective was to collect as much information as possible to answer the following questions:

- What were the decisions that followed the initial detection of VOCs in the Hadnot Point and Tarawa Terrace drinking water systems?
- Who made those decisions, and what were the reasons for making them?
- Were the decisions reasonable considering the regulatory environment, technical and industrial knowledge, and the standard operating practices of water system operators during the period?

To address this objective in a comprehensive manner, the Panel completed the following actions:

- Made an extensive effort to obtain all relevant data.
- Identified and reviewed relevant documents on the administrative history of the contamination issue from Camp Lejeune; the Marine Corps; federal, state, and local government agencies; and private entities.
- Interviewed individuals associated with, or with knowledge of, Camp Lejeune's water supply system, the base's environmental management program, and other environmental issues to obtain first-hand information on the 1980–1985 period and subsequent years.
- Solicited comments of concerned citizens through a public meeting and other communications.
- Obtained published literature from the regulatory, technical, and scientific community regarding groundwater contamination (TCE and PCE) and treatment issues during the 1980–1985 period. The Panel researched published literature to determine what information was available discussing the toxic properties of TCE and PCE that, if known by those responsible, might have influenced decisions made by Camp Lejeune's leadership in the 1980–1985 period.
- Used the Panelists' professional knowledge regarding drinking water treatment, groundwater contamination, regulatory actions and their evolution, the progression of scientific understanding about the toxic properties of TCE and PCE, and military drinking water systems and groundwater practices.

The Panel's specialized knowledge was useful in analyzing Camp Lejeune's actions during the time period when the base began to realize its drinking water wells were contaminated with VOCs. The Panelists have specific expertise in:

- Drinking water treatment in the 1980s,
- Public perceptions regarding contamination of groundwater and drinking water,
- Water industry practices related to unregulated substances,
- Formal and informal regulatory activities and initiatives, as well as their evolution,

- Scientific understanding about the toxic properties of the chemicals of interest and the development of this understanding, and
- Procedures and policies followed by the military, particularly the Marines.

Together, the approaches and information sources described above provided a comprehensive record of the events and decisions made at Camp Lejeune and common practices in the water industry during the period 1980-1985. The Panel focused on the detection of VOCs in some drinking water wells at Camp Lejeune and the responses of Camp Lejeune's leadership and staff to managing the base's water quality and assuring the safety of the water provided to base residents.

Although the Panel was not tasked with evaluating the potential adverse health effects claimed by former Camp Lejeune residents, the Panel believed it was appropriate to acquire a basic knowledge of the health effects associated with TCE and PCE. In addition, the Panel visited Camp Lejeune and observed its water supply systems in order to understand how the systems operated in the 1980s.

The following section details the approach the Panel took to identify and acquire relevant information.

1.1 Document Collection

The Panel compiled over 1,600 documents related to this study and reviewed the most relevant documents to obtain pertinent information and identify individuals, both military and civilian, with knowledge of Camp Lejeune's drinking water contamination issue. Approximately 660 Marine Corps documents used in the ATSDR's public health assessment were included in this review.

The Panel began acquiring documents at the May 10, 2004, meeting at Camp Lejeune, which also allowed Panelists to observe the base's water systems first-hand. At this meeting, base personnel introduced the administrative record for the 1980–1985 period, discussed the background for the Panel's inquiries, detailed the type and number of available records, and described the rationale for its records search. The Panel believes that the incompleteness of documentation available for this study is the result of the Marine Corps' record retention policies and the loss of records during over

20 years of storage. Marine Corps leadership at all levels encouraged the Panel to seek relevant information from other sources in order to supplement the core information provided by the base.

The Panel submitted requests for documents under the Freedom of Information Act (FOIA) to the North Carolina Department of Environment and Natural Resources' (NCDENR) Hazardous Waste and Superfund departments, the EPA's Headquarters and Region IV offices, and the U.S. Geological Survey (USGS) to ensure that all relevant documents were collected. The Panel also requested any relevant information from the Bureau of Naval Medicine (BUMED), the Navy Environmental Health Center (NEHC), Atlantic Division Naval Facilities Command (LANTDIV), and the U.S. Army Center for Health Promotion and Preventive Medicine (CHPPM).

The Panel requested documentation related to the TCE or PCE contamination at Camp Lejeune and/or ABC Cleaners (ABC Cleaners, an off-site drycleaner, was the source of PCE contamination in the Tarawa Terrace drinking water system); background information on TCE and PCE; and standards, regulations, codes, directives, or other similar requirements in place regarding TCE or PCE in drinking water through 1985. The Panel also requested that concerned citizens provide relevant documentation for review.

Documents obtained through these processes were reviewed, summarized, coded and entered into an electronic database as described in Section 1.4, Body of Evaluated Information.

1.2 Personal Interviews

The Panel conducted 25 interviews with key individuals who may have had knowledge of the Camp Lejeune groundwater contamination issue during the 1980–1985 period. The Panel was particularly interested in obtaining insights from individuals who had first-hand knowledge of the potential contamination, including personnel from Camp Lejeune's Environmental Division, government agencies, and environmental laboratories and how Camp Lejeune's chain of command responded to that information. The Panel was mindful that base personnel depended on other organizations for information on which to base decisions or for explicit guidance. The Panel considered information from these sources to helpful in providing a comprehensive understanding of decisions made during 1980-1985 and the rationales behind them. The Panel identified several individuals in Naval

Facilities Engineering Command Atlantic Division (LANTDIV) whom it hoped could provide these insights. A list of individuals is provided in Attachment E.

The Panel also identified and interviewed several former residents who had personally researched the water contamination issue, requiring the Panel to differentiate beliefs of exposure from knowledge of the Marine Corps' actions during the early 1980s. The Panel continuously updated its list of interviewees as the document reviews, interviews, and concerned citizen solicitations progressed.

The Panel retained a licensed investigator with expertise in environmental issues and conducting interviews to locate and interview individuals it believed could provide relevant information. Due to the passage of more than two decades, however, the investigator was unable to locate all individuals initially sought. In addition, some individuals declined either to be interviewed or declined a second interview requested to clarify information. The Panel's absence of legal authority precluded its ability to compel testimony.

1.3 Solicitation of Concerned Citizen Comments

The Panel conducted a publicized, two-day public meeting on June 24–25, 2004, at Coastal Carolina Community College in Jacksonville, North Carolina, to receive comments and documentation from former residents of Camp Lejeune and other interested members of the public related to the water contamination issue. The public meeting provided the Panel with the opportunity to discuss its work with these concerned citizens. Although participants addressed the issues within the Panel's focus and offered insights into past methods of waste disposal at the base, most comments focused on health effects claims and individual issues outside the scope of the Panel's mandate. As stated previously, the Panel separated health effects beliefs from knowledge of the Marine Corps' decisions and actions. The Panel received submissions and letters from concerned citizens throughout its review, including additional documentation, suggestions for potential interviewees, and comments on the direction and scope of the Panel's review. See Attachment F for a list of presenters.

1.4 Body of Evaluated Information

The Panel solicited extensive documentation from a wide range of sources to conduct a comprehensive study about TCE and PCE, Camp Lejeune's use and handling of these chemicals,

and environmental issues associated with these VOCs in drinking water wells at Camp Lejeune through 1985. Many sources provided duplicate documents. USGS provided several reports related to Camp Lejeune, but the reports were not pertinent to the Panel's mission. Other agencies were not able to provide relevant documentation. BUMED referred the Panel to the Marine Corps, and NEHC stated that it had no information on TCE, PCE, or Camp Lejeune documents authored prior to 1992. EPA's Region IV office stated that its Water Management Division had no records in response to the Panel's FOIA request for information on ABC Cleaners.

All documents retrieved by the Panel were systematically organized and archived, along with summary reviews. These documents were organized into the 15 categories shown in Attachment G.

1.5 Review process

The Panel reviewed a large volume of information over a relatively brief time. The Panel's support contractor summarized data to facilitate a broad and detailed understanding of the facts. Reviewers examined documents to extract pertinent information for further analysis or incorporation into the final report and assigned a significance ranking to assist with subsequent reviews. The examination process consisted of an initial review to identify potential interviewees and organizations to contact. Documents then received a primary and secondary review to identify important content, focusing on key issues and questions, such as the knowledge and actions of individuals and organizations associated with the water contamination issue, the Marine Corps' knowledge and response to the contamination, and the level of scientific and industry information available to personnel in Camp Lejeune's Environmental Division.

The Panel was required to make judgments about the quality and comprehensiveness of the documents. The scientific literature on the history and health effects of TCE and PCE, as well as water industry reports on the detection of these chemicals and approaches to treating water contaminated with them, was considered highly accurate and reliable. The availability of this information was not, however, taken as indicative of the level of knowledge of Camp Lejeune's Environmental Division regarding TCE and PCE. The documentation on the operation of Camp Lejeune's drinking water supply system, its Environmental Division and this office's communications with other organizations was not complete. Panelists considered this information usable, however, and are confident that it provided adequate and accurate facts that support the

findings of this report. Panelists viewed the records of interviews with key individuals associated with Camp Lejeune's drinking water system and environmental monitoring program, as well as some former residents, as valuable in providing insights into events and decisions in the 1980–1985 period. The Panel recognized that interviews varied in their usefulness depending on the individuals' recall of events after more than two decades and their level of willingness to fully discuss their involvement.

The Panel held numerous meetings and conference calls to discuss the information and reach a consensus regarding the findings of the study and recommendations for future action. This report, developed for submission to the Commandant of the Marine Corps, summarizes the Panels findings and recommendations. Throughout its work, the Panel functioned independently of the Marine Corps, and to ensure maximum independence, no draft of this report was shared with the Marine Corps.

This report is intended to present the Panel's activities and findings in a structure that is helpful to the reader. Key elements of the body of the report are summarized in the Executive Summary. Section 1, Introduction, describes in detail the Panel's activities and approach to fulfilling its charge. Section 2, Historical Perspective, contains information on the regulatory framework and toxicology of TCE and PCE and a discussion of water supply industry practices during the early 1980s. Section 3, Findings on Camp Lejeune, assesses the Marine Corps' organizational structure and specific details surrounding the base's sampling and analysis and subsequent closure of wells in Hadnot Point and Tarawa Terrace.

2. HISTORICAL PERSPECIVE

Since first formulated over a century ago, trichloroethylene (TCE) and tetrachloroethylene (PCE) have been used extensively for degreasing metal parts, dry cleaning, and many other industrial purposes. Over time, the use, storage, and disposal of these chemicals led to significant pollution of the nation's surface water and groundwater resources. This section summarizes the historical knowledge of the toxicology of TCE and PCE, drinking water regulations, and the drinking water industry's knowledge of the chemicals and their prevalence in groundwater during the 1980–1985 time frame—when Camp Lejeune first identified the contaminants in its drinking water.

2.1 Industrial Uses of TCE and PCE

TCE and PCE are considered synthetic organic chemicals (SOCs). TCE was first synthesized in 1864 and its use continued to expand, particularly during and after World War II, reaching peak production in 1970 (Doherty, 2000a). PCE was first synthesized in 1821. Its use and production expanded in a pattern similar to TCE, and production of PCE also peaked in 1970 (Doherty, 2000b).

Use of TCE as a dry cleaning solvent expanded in the 1930s. In the 1940s, TCE as a drycleaning solvent was discontinued when it was found to attack certain cellulose acetate dyes. The primary use of TCE transitioned to vapor degreasing of metals parts. By the early 1950s, 92 percent of TCE was consumed in vapor degreasing (Doherty, 2000a). From the 1950s through the mid 1970s, TCE was also used as a general and obstetrical anesthetic; grain fumigant; skin, wound, and surgical disinfectant; pet food additive; extractant of spice oleoresins in food; and extractant of caffeine for production of decaffeinated coffee. The U.S. Food and Drug Administration banned these uses in 1977 (Doherty, 2000a). TCE was marketed to consumers as a cleaner for home septic systems, to be used on a regular, long-term basis to prevent blockages in waste pipes. This usage contributed to the contamination of major groundwater resources in the United States. During the 1980s, approximately 80 percent of TCE was used in cleaning and degreasing.

PCE was not used extensively until the 1940s, when it began to replace TCE in the dry cleaning industry. By 1967, 88 percent of PCE was used in the dry cleaning industry. Although dry cleaning

continued to be the primary use of PCE, the amount of PCE used in the dry cleaning process decreased substantially in the 1980s due to improvements in the dry cleaning equipment and vapor recovery systems. The growth in use of wash-and-wear fabrics and new environmental regulations also reduced its use (Doherty, 2000b).

2.2 Use of TCE and PCE at/near Camp Lejeune

TCE, the primary contaminant of concern in the Hadnot Point drinking water system at Camp Lejeune, was present due to past disposal practices in the area. These disposal practices were common in the United States prior to the late 1970s. In a September 15, 1985 *Raleigh News & Observer* article on Camp Lejeune, the following statement was reported:

> *"Arthur E. Linton, federal facilities coordinator for the EPA's southeast region in Atlanta, said Camp Lejeune and other military installations had disposed of waste in ways that were accepted practices in the past. 'The military hasn't done anything that wasn't done in the private sector,' he said."* (Allegood, 1985)

PCE in the Tarawa Terrace drinking water system originated from ABC Drycleaners, which began operations in 1954. The two wells contaminated from these operations, TT-26 and TT-23, were located approximately 900 feet and 1,800 feet from the cleaners, respectively. Well TT-26 was drilled in 1952, and TT-23 in 1984. The base closed both wells in February 1985. It is not known how long the groundwater around those wells was contaminated before closure.

2.3 Regulatory Framework

The U.S. Environmental Protection Agency (EPA), the State of North Carolina, and other governmental agencies regulate public drinking water systems and the discharge of wastes into surface water bodies to ensure that our surface waters are fishable, swimmable, and protected, and drinking water is safe. In 1972, Congress passed the Federal Water Pollution Control Act (FWPCA), which mandated major changes in the way water quality would be controlled in the United States. This regulation provided the basis for the water quality programs used today. The objective of the act was to *"…restore and maintain the chemical, physical and biological integrity of the Nation's waters."* If met, the objective would ensure a safe drinking water supply and that all waters of the nations were fit for fishing and swimming. The Clean Water Act (CWA) amended the FWPCA in 1977. The CWA controls discharges of pollutants into waters of the United States through a system of ambient water quality standards and pollutant discharge permits issued to point sources.

In 1974, Congress passed the Safe Drinking Water Act (SDWA) to address the public's growing concern over contamination of domestic drinking water supplies with SOCs and other pollutants (P.L. 93-523, 1974). The SDWA was implemented in three steps:

Step 1. Develop National Interim Primary Drinking Water Regulations (NIPDWRs).

Step 2. Arrange for the National Academy of Sciences (NAS), a Congressionally chartered organization not a part of the federal government, to assess the health effects of contaminants in drinking water to provide proposed recommended maximum contaminant levels (RMCLs).

Step 3. Promulgate National Primary Drinking Water Regulations (NPDWRs) that would include RMCLs, MCLs, and monitoring and reporting requirements for those contaminants that may have an adverse effect on human health.

2.3.1 National Interim Primary Drinking Water Regulations (1975–1980)

The purpose of the NIPDWRs was to protect human health based on either MCLs for specific pollutants or treatment technologies to remove the pollutants and "secondary standards" to protect the aesthetic quality of drinking water. The regulation was intended to protect public water systems and ensure that they supplied potable waters free of biological, chemical, or physical contaminants (Sullivan et al, 2001). A public water system is a system that has at least 15 service connections or serves 25 or more people for at least 60 days per year. A community water system is a public water system that serves a resident population. During the 1980–1985 timeframe, Camp Lejeune operated eight community water systems.

The NIPDWRs for numerous microbiological, inorganic, organic, and radionuclide contaminants were published on December 24, 1975, and became effective on June 24, 1977. Amendments were issued in 1976, 1979, and 1980. The MCLs and monitoring and reporting requirements for these NIPDWRs were based on the 1962 U.S. Public Health Service standards for drinking water, which in turn were derived from previous standards dating back to 1915 for microbiological standards and 1948 for inorganic chemicals (Sullivan et al, 2001). TCE and PCE were not among the contaminants included in these NIPDWRs.

The 1979 NIPDWR amendments provided the final regulations for the control of total trihalomethanes (TTHMs), which established an MCL of 0.10 parts per millions for TTHMs in drinking water and provided a schedule for compliance and monitoring. This regulation required

that any water treatment system serving between 10,000 and 75,000 people begin mandatory monitoring of TTHMs by November 1982, and compliance with the MCL was required by November 1983 (NIPDWR, 1979). In preparation for TTHM compliance, the Marine Corps began sampling its drinking water system in 1980, which led to the identification of volatile organic compounds (VOCs).

EPA requested that NAS conduct a study of the health effects of contaminants in drinking water, including TCE and PCE. NAS submitted its report in 1977 (NAS, 1977), followed by eight additional reports. The NAS reports provided EPA with toxicological assessments of contaminants in drinking water but did not provide RMCLs, which are non-enforceable health goals such that there are no adverse health effects if humans are exposed to this level of the contaminant for a lifetime. NAS did develop "suggested no adverse response levels" (SNARLs) for 1-day and 10-day exposure, which EPA used as a basis for its SNARLs. NAS elected not to establish a long-term SNARL due to lack of sufficient data and determined that development of RMCLs was EPA's responsibility.

2.3.2 Suggested No Adverse Response Levels for TCE and PCE (1979–1980)

During development of the NPDWRs for TCE and PCE, EPA issued an interim non-enforceable guidance for community water systems regarding acceptable limits of TCE and PCE in drinking water. In November 1979, EPA issued a SNARL for the non-carcinogenic risks associated with short- and long-term exposures to TCE. The 1-day SNARL for TCE was set at 2,000 µg/L and the 10-day SNARL was set at 200 µg/L. The long-term (based on a 70-year exposure) SNARL for TCE was set up 75 µg/L. EPA did not issue guidance on actions to be taken by the community water system if TCE concentrations in drinking water exceeded these values.

EPA issued a SNARL for PCE on February 6, 1980. The 1-day, 10-day, and long-term (70 years) SNARLS for PCE when the primary exposure route is drinking water were set at 2,300 µg/L, 175 µg/L, and 20 µg/L, respectively. EPA also issued Suggested Action Guidance for PCE in April 1980 related to contamination from coated asbestos-cement pipe. This pipe, used for water distribution lines, was coated with vinyl toluene to prevent pipe degradation from erosion. Water utilities in New England had documented leaching of PCE from this pipe, with the highest values found in "dead ends" of the system with low flow (Larson et al, 1983). The PCE concentration in

the pipes decreased over time and was usually not detectable after approximately five years. The EPA guidance recommended that the community water system take remedial action within 24 hours if the PCE concentration exceeded the 1-day SNARL and take remedial action within 10 days if the PCE concentration exceeded the 10-day SNARL. The guidance also recommended that PCE concentration should not exceed 40 μg/L for any extended period.

2.3.3 National Primary Drinking Water Regulations for TCE and PCE (SDWA, 1982–1992)

The third step in the SDWA process required EPA to propose and promulgate NPDWRs, including RMCLs, MCLs, and monitoring and reporting requirements, for 83 contaminants that may have an adverse effect on human health. Promulgation of the 83 contaminants was planned in four phases:

Phase I. Volatile synthetic organic chemicals (VOCs, including TCE and PCE)

Phase II. Synthetic organic chemicals, inorganic chemicals, and microbiological contaminants

Phase III. Radionuclides

Phase IV. Disinfection by-products, including trihalomethanes

EPA published an Advanced Notice of Proposed Rule Making (ANPRM) for Phase I VOCs in March 1982 and held several public workshops to discuss the proposed rule (EPA, 47 *FR* 24330, 1982). EPA used "negotiated rulemaking" to develop the MCLs, which allows the regulated community and other individuals with an interest or expertise to participate in the rulemaking.

The proposed rule for Phase I VOCs, published in the *Federal Register* on June 12, 1984 (EPA, 49 *FR* 24330, 1984), set the RMCL for TCE and PCE at zero, based on each chemicals' potential as a carcinogen. EPA published a proposed NPDWR for TCE in November 1985 (EPA, 50 *FR* 1774, 1985). The final NPDWR for TCE, which prescribed an MCL of 5 μg/L and monitoring, reporting, and public notification requirements, was published on July 8, 1987 (EPA, 52 *FR* 25690, 1987). The NPDWR for TCE took effect on January 9, 1989. The NPDWR for PCE was published on July 8, 1987, which included an MCL of 5 μg/L and monitoring, reporting, and public notification requirements (EPA, 52 *FR* 25690, 1987). The NPDWR for PCE took effect in 1992. North Carolina obtained primacy in 1982 and enforces drinking water regulations.

2.4 Development of Toxicity Data for TCE and PCE

The administrative record shows that several chlorinated VOCs were identified in the groundwater and tap water at Camp Lejeune during the early 1980s. Because the closure of drinking water supply wells at the base resulted from detections of TCE and PCE, the Panel addresses only these two VOCs in this report.

Although information about the toxic properties of TCE and PCE had been developed and was widely disseminated during the 1980–1985 period, our knowledge of their toxic properties has expanded considerably since that time. For the purposes of this investigation, the Panel reports only those medical consequences of TCE or PCE that were reported in authoritative sources and represented a broad consensus in the scientific community, not only in the United States but also among developed countries worldwide. Two organizations cited in this discussion are the World Health Organization (WHO) and NAS. Over the years, both of these organizations have evaluated the effects of human exposure to TCE and PCE, including exposure from drinking water.

The historical development of toxicity information for TCE and PCE is summarized from Sullivan et al, 2001, unless otherwise noted. The primary human health effects of high (non-environmental) TCE and PCE exposure are non-carcinogenic, involving central nervous system (CNS) dysfunction and liver and kidney damage. CNS effects include depression, dizziness, headache, vertigo, and behavioral effects. Other adverse effects on mucous membranes, eyes, skin, kidneys and lungs have also been noted. TCE and PCE have been found to cause cancer in laboratory animals under certain conditions. EPA has identified both agents as potential carcinogens.

2.4.1 Trichloroethylene

The first industrial reports of TCE toxicity were reported in 1915 when an acute toxic syndrome was noted. Most information regarding the toxicology of TCE was established during the 1930s. The first extensive medical study of industrial health effects from TCE was published in 1932. A 1937 study identified adverse effects to the CNS, gastrointestinal system, and circulatory system as a result of TCE and PCE exposure.

Prior to 1980, NAS documented the effects of TCE inhalation as having the ability to depress the CNS in humans causing loss of coordination and unconsciousness and cause kidney and liver

damage in laboratory animals (NAS, 1977). The kidney and liver damage in laboratory animals was believed to be predictive of human responses. TCE, when ingested for a lifetime, was also considered a liver carcinogen in mice. The cancer risk to humans from consuming 1 µg/L of TCE in water was estimated to be approximately one in ten million over a 70-year lifespan (NAS, 1977). NAS also reported that TCE was found to cause no birth defects in highly exposed laboratory animals.

In 1980, NAS expanded its earlier assessment and stated that TCE is not only a carcinogen but also is capable of causing mutations of genetic material, which may be the mechanism by which it causes cancer. NAS pointed out that the cancer-causing effect increased with increasing dose—an observation that provided greater scientific weight to TCE's cancer potential (NAS, 1980). This volume first reported a SNARL for TCE of 15,000 µg/L in tap water for an exposure of no more than seven days. NAS went on to state that because it is "not possible to establish a 'no effect level' for chronic, non-carcinogenic toxicity," no safe level of chronic exposure could be estimated. This report was used in development of EPA's SNARL for TCE, which was issued later that year. In 1981, the WHO recommended a tentative guideline of 30 µg/L TCE in drinking water for a lifetime exposure (WHO, 1984).

By 1983, NAS pointed out that progress had been made in understanding how TCE causes cancer and liver toxicity. The 1983 report went on to estimate the cancer risk for humans, by gender, ingesting 1µg/L TCE via drinking water. The cancer risk for males was estimated at four in ten million for a lifetime of exposure and 0.7 in ten million for females—indicating that males are more susceptible to carcinogenic properties of TCE than females. Again, NAS was unable to estimate a non-cancer SNARL for chronic exposure (NAS, 1983).

WHO issued its first report on TCE in 1985. This report closely paralleled the NAS findings in many respects. WHO reported on the depression of the central nervous system, liver toxicity, carcinogenicity, and mutagenicity of TCE. WHO found "clear evidence" for the carcinogenicity of TCE and noted the production of not only liver tumors but also tumors of the lung and testes (WHO, 1985).

Another reference available in workplaces across the U.S. was Patty's Industrial Hygiene and Toxicology. The 1981 edition noted the toxicity of TCE to the nervous system, liver, and kidneys, similar to the NAS's descriptions in 1977 and 1980; however, the Patty's authors did not find the evidence for genetic damage or cancer to be sufficiently compelling to be considered a problem in the workplace (Patty's, 1981).

2.4.2 Tetrachloroethylene

The chronic toxicity of PCE to laboratory animals was reported in 1937; the most sensitive target organ was the kidney. Although there was some controversy regarding the toxicity of PCE in the 1940s, the maximum allowable air concentration in the workplace was reduced from 200 ppm to 100 ppm (200,000 µg/L to 100,000 µg/L) in 1947.

Prior to 1980, NAS documented the effects of PCE inhalation as having the ability to depress the central nervous system in humans causing loss of coordination and unconsciousness. NAS found that PCE when inhaled at high concentrations for long periods of time did not produce toxicity in species believed to be predictive of human responses, such as rats, rabbits, guinea pigs, and monkeys. NAS also reported that PCE caused no birth defects in highly exposed laboratory animals. PCE had not yet been tested for carcinogenicity (NAS, 1977).

In 1980, NAS expanded its earlier assessment of PCE and noted that in sufficiently high doses, PCE is a *"portent depressant of the central nervous system."* PCE also was reported to cause liver injury several days after exposure, as well as kidney damage. With increasing duration of exposure, kidney damage became increasingly severe. The NAS report also found that PCE did not produce genetic damage and that, despite PCE being toxic to developing embryos whose mothers had been exposed, it did not produce skeletal malformations. PCE's potential carcinogenicity was drawn from a study performed by the National Cancer Institute that found that PCE produced liver cancer in both laboratory rats and mice. Using this data, NAS calculated an estimated cancer risk for humans of 0.6 per ten million individuals when exposed to 1 µg/L of PCE in drinking water over a lifetime (NAS, 1980).

The NAS 1980 report also suggested a SNARL of 25,000 µg/L in drinking water for an exposure of no more than seven days. Further, NAS stated that because it is *"not possible to establish a 'no effect level'*

for chronic, non-carcinogenic toxicity," no safe level of chronic exposure can be estimated. EPA used this report when developing its SNARL for PCE, which was issued later that year. In 1981, the WHO recommended tentative guidelines of 10 µg/L PCE in drinking water for a lifetime exposure (49 *FR* 24341, 1984).

By 1983, NAS pointed out that progress had been made in understanding the metabolism of PCE in the body and its role in producing liver toxicity. The 1983 NAS report declined to estimate the cancer risk for humans ingesting PCE via drinking water. NAS recommended a non-cancer SNARL for chronic exposure to PCE through drinking water of 14 µg/L (NAS, 1983).

WHO issued its first report on PCE in 1984. WHO's report closely paralleled the findings of the NAS reports in many respects. WHO reported that PCE caused depression of the central nervous system, liver toxicity, and mutagenicity in humans. WHO found limited evidence of the carcinogenicity of PCE in mice and noted that epidemiologic evidence was insufficient to conclude that PCE causes cancer in humans (WHO, 1984).

The 1981 edition of Patty's noted the toxicity of PCE to the nervous system, liver, and kidneys, similar to the NAS's descriptions in 1977 and 1980. Patty's also noted that there was evidence that PCE exposure caused birth defects, but did not cause genetic mutations. PCE's carcinogenicity in animals was acknowledged without comment on the relevance to humans (Patty's, 1981).

2.4.3 Development of RMCLs for TCE and PCE

When developing the proposed NPDWR for TCE and PCE (EPA, 49 *FR* 24330, 1984), EPA's Carcinogen Assessment Group (CAG) reviewed the available toxicological studies performed on humans and animals, including the conclusions of the International Agency for Research on Cancer (IARC), which stated there was limited evidence of TCE's or PCE's carcinogenicity based on experimental animal studies and inadequate evidence of carcinogenicity from available human data (49 *FR* 24341, 1984). In the end, CAG used data from high-dose animal studies to calculate projected excess cancer risk estimates when developing the RMCLs for TCE and PCE published in the proposed NPDWR.

2.5 Water Supply Industry Practice: 1980–1985

Groundwater contamination by TCE and PCE was documented in the 1960s and 1970s, and the water supply industry was aware that these contaminants could be present in source waters. Much of what was known about water quality, management, and pollution control prior to EPA's inception was shared through professional organizations such as the American Water Works Association (AWWA). AWWA, established in 1881, is one of the most respected professional organizations in the water supply industry. AWWA began transmitting information to its members through publications and meetings in the 1920s (Sullivan et al, 2001). AWWA's local section in North Carolina in the early 1980s had approximately 600 of the 32,000 nationwide members.

2.5.1 EPA and the Water Supply Industry

By 1980, EPA had been operational for a decade. The Agency expended considerable effort informing the water supply industry of new and proposed regulations, as well as the Agency's priorities and approaches. EPA distributed information documenting the activities of NAS in the *Drinking Water and Health* series, whose first volume was issued in 1977. It is unclear whether water works operators of military installations were recipients of this information; however, one would have expected them to be at least generally aware of EPA's activities.

In the early 1980s EPA also developed a non-regulatory program to provide water utilities and state and local health agencies with information regarding the toxic properties of chemicals commonly found in drinking water and the safe levels of human exposure to these substances. This program produced "Health Advisories" on specific substances. The Health Advisories were widely sought by state and local agencies and were known to at least some parts of the military, including Camp Lejeune. It is unclear how the informal guidance in EPA's Health Advisories was received by Camp Lejeune water works professionals in this context. These documents were perceived as reliable evaluations of health (i.e., toxicological and epidemiological) data and useful for determining safe/unsafe levels of chemicals in drinking water. Indeed, some states and water utilities often treated these levels as *de facto* standards to guide water treatment practices and to decide on whether to alert consumers about possible health threats.

Most water utilities disinfected their drinking water sources prior to delivery to customers. During the late 1970s, EPA discovered that disinfection of drinking water could form chlorination

byproducts (generally now referred to as disinfection by-products or DBP), some of which were considered carcinogens. Water supply industry professionals were skeptical of this new "risk."

In the early 1980s, the water supply industry, by and large, used conventional water treatment techniques to comply with enforceable regulations, but did not monitor or treat for unregulated compounds. Typically, the water supply industry waited until regulations were finalized before changing their practices, since the cost of compliance with regulations was unavoidable. While no documentation exists to indicate how the Marines at Camp Lejeune sought to address unregulated substances such as TCE and PCE, it is reasonable to conclude that Camp Lejeune water works professionals were in step with the rest of the industry—waiting until legal standards were issued before altering water treatment and monitoring practices. The administrative record at Camp Lejeune clearly demonstrates a willingness to comply with the new THM standards being promulgated by EPA.

The Journal of AWWA (JAWWA), published monthly, is a forum for members to publish papers that address the primary issues concerning public water systems, such as water treatment technologies, distribution systems, water quality monitoring, and upcoming or recently promulgated regulations. The Panel reviewed abstracts for all articles published in JAWWA between January 1980 and December 1985 to ascertain the state of the industry's knowledge regarding the potential for TCE and PCE contamination of groundwater, status of monitoring and analysis techniques for TCE and PCE, and recently enacted and upcoming drinking water regulations (particularly those related to TCE and PCE). Pertinent articles are discussed in the text below.

2.5.1.1. The Water Supply Industry and SOCs

Review of the 1980 JAWWA abstracts provided four articles that discussed synthetic organic chemicals, including TCE and PCE. One article in particular highlighted the industry's emerging realization that groundwater contamination by TCE and PCE was becoming more widespread (Trussell and Trussell, 1980). This article discussed approaches a system might use to evaluate the purity of its water source, review the effectiveness of its current treatment, assess the risk of exposure to consumers, study the feasibility of various courses of action if contamination is identified, and implement a final plan. Six steps were identified in the process: source

evaluation, risk assessment, feasibility analysis, scheduled periodic surveillance, cost-benefit analysis, and implementation.

In November 1979, EPA had amended the NIPDWRs to include a final regulation setting an MCL of 100 μg/L for TTHMs in drinking water (Singer et al, 1981). This regulation required that water systems begin monitoring for TTHMs; the monitoring requirements were phased in depending upon system size. For systems serving 10,000–75,000 people, such as Hadnot Point, regulation mandated monitoring by November 29, 1982 and compliance by November 29, 1983. These federal regulations did not apply to community water systems serving less than 10,000 people (e.g., Tarawa Terrace) and left primacy over these small systems to individual states. The analytical method used to determine TTHM also showed peaks that represented other SOCs present in the water. These peaks could alert the community water system to the potential that there were industrial sources contaminating the groundwater.

Although there were no enforceable MCLs for the SOCs identified in these groundwater supplies, some articles published in JAWWA took the position that the public should not be provided drinking water containing SOCs. This statement from Petura, 1981, is similar to others in these articles:

> *"The contamination of groundwater resources by substances such as TCE and methylene chloride has created a dilemma that requires the attention of public health officials and professional specialists in chemistry, hydrogeology, and environmental engineering. Each situation is unique and should be studied carefully before any conclusions are reached and action is taken. However, because these materials cannot be detected via the senses until the concentrations reach toxic levels, expeditious action must be taken to protect public health."*

By 1982, groundwater contamination was receiving much attention in the water supply industry. The theme of the August 1982 issue of JAWWA was organic contamination in groundwater. In the JAWWA editor's summary of the theme, he stated, *"…water utilities that rely heavily on groundwater, particularly the thousands of small systems, should guard against sources of pollution and should take immediate steps to monitor and treat supplies that have already been tinged with organic and other contaminants."* The issue included reports on research in progress to manage groundwater quality, presented methods of treating already polluted sources most economically, and cited a case history of how one community groundwater supply was being managed to further prevent intrusion of contamination (Dyksen and Hess, 1982).

No JAWWA articles or reports were found in the Camp Lejeune administrative record.

2.5.1.2. Leaching of PCE from Asbestos-Cement Pipe

During late 1979 and early 1980, there was interest on the part of many states, water utilities, individuals, and the EPA in the leaching of PCE from vinyl toluene-lined asbestos-cement (A-C) pipe. The issue was a concern to EPA and prompted the Suggested Action Guidance for PCE (USEPA, 1980b).

The April 1983 issue of JAWWA contained an article by Larson *et al* that discussed the options that the homeowner, community water system, state, and EPA could take to reduce the public's exposure to PCE in drinking water from this source. This article was followed by a discussion of the issue from the perspective of the pipe manufacturer, a water utility operator, and a toxicologist. The article suggested that the CWS install blowoffs and flush lines near the dead ends of the system, where the highest concentrations were usually observed, and notify effected homeowners and identify actions the homeowners could take to reduce their exposure. The article states that the current activities consist primarily of flushing and bleeding lines (due to the highest concentrations being in dead ends) (Larson *et al*, 1983).

When the American Water Works Service Co. (AWWSC) was alerted to the potential PCE problem in 1980, it began an extensive sampling program to determine if leaching was a problem in its pipe. The company identified two areas with high PCE and then continued testing in these two areas. AWWSC installed a blowoff to increase water flow in the areas and keep PCE levels below EPA's recommendations (Moser, 1980).

2.5.2 Small Community Water Systems and NIPDWRs

The National Interim Primary Drinking Water Regulations applied to 60,000 community water systems and 160,000 non-community water systems. Implementation of the NIPDWRs pointed out a number of water quality and management problems. For instance, in fiscal year 1982, more than 70,000 violations of the interim regulations were recorded by 20,000 community water systems. Eighty-four percent of these violations were for monitoring and reporting; however, more than 9,000 community water systems required improved facilities to meet drinking water standards.

In 1982, the microbiological requirements were not continuously met by many of the smaller systems that served fewer than 3,300 persons; 10 percent of the systems violated the MCL requirements and more than 25 percent violated the monitoring requirements. Small community water systems tended to also have problems meeting the MCLs for certain inorganic chemicals. This problem was found primarily with small systems using groundwater, since removal of inorganic chemicals can be difficult and relatively expensive on a per capita basis.

Compliance problems related to MCLs and monitoring and reporting were often associated with small systems because they frequently have limited financial and human resources available. According to Cortuvo and Vogt (1984), EPA was considering revising the regulations to identify technologies that were economically achievable for small systems. These technologies would assist the states in issuing variances when a small community water system could not meet the requirements because of the characteristics of its raw water sources.

2.6 AWWA's Response to the ANPRM for Phase I VOCs

The AWWA provided comments to EPA on the Advanced Notice of Proposed Rulemaking for Phase I VOCs, which included TCE and PCE. These comments were summarized in the "Summary of Public Comments" section of the proposed rule for Phase I VOCs (49 *FR* 24332, 1984) published in June 1984. AWWA recommended that contaminants be controlled at their source through EPA's existing statutory authorities but did not think MCLs were appropriate at that time because "safe" levels of VOCs could not be determined using existing health-effects data. The AWWA suggested that an MCL be established if a significant health risk exists after data have been evaluated by a recognized scientific organization such as the NAS.

In the interim, AWWA recommended that national monitoring for specific compound identification should be implemented for all water supplies, but requirements for community water systems serving less than 10,000 people, such as Camp Lejeune, would be at the discretion of the state. It is unclear if AWWA felt that community water systems serving less than 10,000 people should conduct limited monitoring or no monitoring at all. The AWWA comments concluded by requesting guidance in the form of contamination levels and action categories for five of the VOCs (including TCE and PCE) for all water supplies.

2.7 Drinking Water Regulation in California: 1980–1985

Research on the activities and regulatory approaches in the State of California during the 1980–1985 period can provide insight on water utility practices and provide a yardstick for assessing Camp Lejeune's performance. California advocated that EPA adopt SNARLS. In 1985, the State Legislature adopted comprehensive drinking water monitoring requirements after TCE and PCE were discovered in the groundwater in the late 1970s and early 1980s.

Military bases generally are recognized to be responsive to MCLs, but do not give budget priority to complying with advisories; and military bases have been firm in dealing with microbial contaminants and TTHM requirements. Prior to the adoption of MCLs for TCE and PCE, California Department of Health Services recommended that customers be notified, provided action level (5 μg/L) guidance, and suggested that supplies be removed from service when concentrations exceeded 100 times the action level.

The early cases of TCE contamination in California, including Rancho Cordova and the Santa Clara Valley, came about by monitoring of underground injection of wastes from nearby industries. Contaminants were detected when new analytical techniques were developed; however, measurements were not always accurate. In some instances, detection occurred as a result of employees smelling the contaminants in the water. Use of wellhead treatment was pioneered during the early 1980s, but not reliably perfected until 1984 or 1985. Military bases in California, such as Camp Pendleton, that had significant groundwater contamination problems felt it was their responsibility to comply with MCLs, but not SNARLs.

2.8 VOCs at Camp Pendleton: 1980–1985

The events at Camp Pendleton, California, could illustrate the Marine Corps practices with regard to VOCs in the early 1980s. Discussions with Pendleton staff (Kalique Kahn, Water Quality and Tracy Sahagun, Waste Management) have indicated that while VOCs and particularly TCE were used and disposed of at Camp Pendleton, water sampling has not detected VOCs in any of the base's water supply wells. These wells were and remain the source of water supply for the base. The base complied with the SDWA requirements, including MCLs as they were established. Even though VOCs were used and disposed of on the base in the same watershed as the drinking water wells, Pendleton did not test for VOCs until MCLs and their associated testing protocols were established

in 1989. The base considered TCE and PCE to be hazardous materials and disposed of them in accordance with existing requirements.

2.9 Summary

In the early 1980s, evidence continued to accumulate within the scientific community that synthetic chemicals, such as VOCs, created significant health risks as a result of long-term exposure. EPA adopted SNARL guidelines that influenced certain utilities to do further monitoring and undertake control measures. Articles in JAWWA in 1980 and 1982 indicate regulation of VOCs was being considered and describe both monitoring and treatment techniques that utilities could use to control them. Despite increasing discussion of these issues within the water supply industry, few utilities invested in control systems prior to the proposal or adoption of an MCL for a given chemical. Recent experience with arsenic control is an example. Further, professional journals are not often read by or disseminated to the people in the field who are struggling to comply with new requirements, particularly during the time period on which the Panel is focusing.

There is nothing in the administrative record to indicate that personnel at Camp Lejeune were aware of either NAS or WHO reports on the toxicity of TCE and PCE, although at least the NAS reports were widely read by the U.S. water supply industry and used as reference materials by some water utilities in the early 1980s and later.

A 1982 memorandum shows that in 1982 base personnel had a copy of EPA's SNARL for TCE, SNARL for PCE, and Suggested Action Guidance for PCE. These documents summarized the toxic properties, including cancer causing potential for humans, of each compound and provided safe, non-cancer levels for durations of exposure for as much as lifetime. While the SNARLS were not enforceable regulatory values, they informed the water supply industry, as well as State and local health authorities, of the potential dangers from drinking water containing TCE and/or PCE.

At Camp Lejeune, it is unclear who might have been aware of this toxicity information due, in part, to administrative arrangements. Specifically, the Water Treatment Division was responsible for monitoring water quality, particularly for regulated substances such as TTHMs. A group called Preventive Medicine would usually be expected to provide information such as SNARLs to the Environmental Division to help understand the significance of chemical measurements.

Furthermore, LANTDIV would have been expected to provide guidance as to the nature and severity of any observed contamination. Finally, the USMC's parent organization, the Navy, provided toxicological guidance through its Bureau of Medicine. Nowhere in the administrative record or in the interviews was there any indication of contributions from these organizations supporting the base's water supply program or its chain of command on this matter. By contrast, considerable documentation indicates that Camp Lejeune was given support from inside and outside the military on dealing with the then newly regulated TTHMs.

The records available to the Panel show that the base made every effort to comply with MCLs and related schedules, but not to anticipate or independently evaluate health risks associated with compounds that might be subject to future regulation (even though SNARLs existed for TCE and PCE). This appears to have been a fundamental policy, which would have overridden any possible issues of divided organizational responsibility between Camp Lejeune and LANTDIV personnel. The Panel's review indicated that Camp Lejeune provided water that had a quality consistent with average civilian utilities in the United Stated and was also consistent with military practice. It is true that some utilities, while there were changing water regulatory requirements in the early 1980s, took early action to eliminate or treat VOC-contaminated sources before being required to do so. Nevertheless, it appears to the Panel that Camp Lejeune exercised a reasonable standard of care considering general utility practices at the time.

3. FINDINGS ON USMC ACTIVITIES AT CAMP LEJEUNE

This section describes the details of the Panel's findings related to the discovery of TCE and PCE contamination in two drinking water systems at Camp Lejeune in the early 1980s. The Panel's findings are based on its review of relevant documents and interviews with current and former military personnel and regulators. The Panel is satisfied its findings are valid based on review of the information available, but emphasizes that additional information that may have provided a more comprehensive understanding was not available. Specifically, there are gaps in how information was communicated among Camp Lejeune personnel and between LANTDIV and Camp Lejeune. In certain cases former personnel stated they could not remember certain facts surrounding the time, noting the length of time that had passed since the early 1980s. Additionally, the Panel was not able to locate and interview any personnel from the Preventive Medicine department at Camp Lejeune.

3.1 Camp Lejeune Drinking Water System

Most of the water system serving Camp Lejeune in the 1980s was constructed when the Camp was built in the 1940s. The base's drinking water was extracted from approximately 100 groundwater wells (in 1984), treated at eight treatment plants (Tarawa Terrace, Hadnot Point, Holcomb Boulevard, Courthouse Bay, Rifle Range, Onslow Beach, Montford Point, and New River), and provided to residents through a network of distribution pipes. Attachment H shows the distribution system for Tarawa Terrace, Hadnot Point, and Holcomb Boulevard. The plants were designed to store raw water until treatment, soften the water by adding lime, conduct filtration to remove sediments, disinfect, fluoridate, and store the treated water until it was pumped to the distribution systems. The Marine Corps followed a general practice of rotating well operations to provide greater reliability and a factor of safety against high demands or system failure. Although the Marine Corps currently conducts significantly more sampling and analysis to ensure human health is protected, this process is still used today. Schematics for the drinking water treatment process at the Hadnot Point and Holcomb Boulevard systems are provided in Attachments I and J, respectively.

Theoretically, it would be possible to calculate the potential past exposure to contaminants that any individual consumer served by these systems may have experienced. To do this, the following information is needed:

- Hourly flow from each water supply well,
- Contaminant concentrations under various pumping conditions, as projected based on historical data,
- Raw and treated water system facilities and their conditions as it existed at the time,
- Operating procedures for the water treatment plants, including actual schedule for use of wells,
- Use of available balancing storage—both raw and treated, and
- Daily (preferably hourly) water demand patterns for all uses on a given system.

Each piece of this information is necessary to determine exposure. If actual data are not available, as is generally the case at Camp Lejeune, it would be necessary to make a series of assumptions. Each assumption would reduce confidence in the results. The available data are presented in Attachment K, which shows the number of wells that existed prior to 1985. It is unclear how the pump capacities were determined, and they can vary widely depending upon demand conditions. When a full data set is created using several assumptions, the confidence in the result can be significantly reduced, as is the value of the estimate in determining actual exposure.

At Camp Lejeune, the contamination of any single well contributing water to one of the water distribution systems would not instantly cause that level of contamination to be delivered to consumers because the water delivered to the tap is made up of water from numerous wells that are operated on a rotational basis. Unless a contaminated well was the only well operating at a certain time, the contaminated water would be diluted by water from other potentially cleaner wells.

The Holcomb Boulevard water treatment system began operation in 1972, serving the Paradise Point, Berkeley Manor, Watkins Village, and Midway Park family housing areas. Prior to this time, the Hadnot Point system was the source of drinking water for these areas. Between 1980 and 1985, 30 to 40 wells supplied the Hadnot Point water plant, which served the Base Industrial area, the Base Hospital, and 19 houses. In 1984 and 1985, the base closed 10 wells due to the presence of

TCE and PCE: two wells in Tarawa Terrace and eight at Hadnot Point (see Figure 1, Summary of Contaminated Wells).

Figure 1: Summary of Contaminated Wells

Well Number	Construction Date	Closure Date	Contaminant
Tarawa Terrace			
TT-23	1984	02/08/1985	PCE
TT-26	1952	02/08/1985	PCE
Hadnot Point			
HP-601	1941	12/06/1984	TCE
HP-602	1941	11/30/1984	TCE
HP-608	1941	12/06/1984	TCE
HP-634	1960	12/14/1984	TCE
HP-637	1970	12/14/1984	TCE
HP-651	1972	02/04/1985	TCE
HP-652	1972	02/08/1985	TCE
HP-653	1978	02/08/1985	TCE

3.2 USMC Environmental Organization Structure

As in the private sector, environmental organizations within the Department of Defense were evolving and expanding in the late 1970s and early 1980s in response to growing environmental concerns and federal compliance requirements. Although the lines of communication and the organizational reporting structure for environmental issues at Camp Lejeune could not be completely determined, the Panel has attempted to reconstruct the organization at the time.

Prior to October 1982, Camp Lejeune's Natural Resources and Environmental Affairs Division (NREAD) was a subset of the Base Maintenance Office (Attachment L). The water system was part of the Utilities Group and reported directly to Base Maintenance on an equal footing with NREAD, which included water quality (Attachment M). During this time, the organization of Preventive Medicine (Attachment N) shows that this department reported through a chain of command to the commanding officer of the Naval Hospital at Camp Lejeune. Thus, even though Elizabeth Betz, the base supervisory chemist, comments that Preventive Medicine was across the hall, the office apparently carried out its traditional independent advice and oversight as part of the hospital organization. Ms. Betz stated that she referred all sampling results to Preventive Medicine, but apparently no additional communication occurred (Betz Interview). Both Ms. Betz and Danny

Sharpe, her supervisor, have indicated that they did not have sufficient staff or funding in the early 1980s, nor the appropriate education and expertise in public health (Betz, Sharpe Interviews) to understand the potential problems associated with the VOC contamination identified in the drinking water. Betz stated that the laboratory was a low priority at the base, and they did not have the proper equipment or manpower at the time.

3.3 Camp Lejeune Environmental Initiatives

In 1977, the first regulations under SDWA became in effect, setting standards for microbiological contaminants, ten inorganic chemicals, six organic pesticides, turbidity, and radiological contamination. Camp Lejeune personnel collected samples from all eight of the drinking water supply systems (Courthouse Bay, Rifle Range, Onslow Beach, Hadnot Point, Holcomb Boulevard, Tarawa Terrace, Montford Point, and New River) in September 1977 and analyzed the samples for the required constituents. The laboratory results from the September 1977 sampling event indicated that none of target constituents were detected in any of the eight water system samples. No additional sampling events for these specific constituents have been identified (Southern Testing and Research Laboratories, 1977).

3.3.1 Camp Lejeune TTHM Sampling and Analysis (1980)

In November 1979, EPA published final regulations for control of TTHMs in drinking water; this regulation established an MCL of 10,000 µg/L and provided a schedule for compliance and monitoring. The regulation required community water systems serving between 10,000 and 75,000 people to begin mandatory monitoring of TTHMs by November 1982 and comply with the MCL by November 1983.

In October 1980, Camp Lejeune initiated voluntary TTHM sampling of the Hadnot Point and New River water distribution systems in anticipation of the November 1982 deadline. The systems were presumably sampled because they served between 10,000 and 75,000 people in accordance with the imminent EPA requirements. At this time, LANTDIV served in an advisory role to Camp Lejeune and facilitated implementation of the SDWA compliance program at the base. LANTDIV arranged for the analyses of the water samples, which were performed by the U.S. Army Environmental Hygiene Agency (USAEHA) laboratory in Fort McPherson, Georgia, and a private contractor, Jennings Laboratories. LANTDIV scheduled monthly TTHM sampling and analysis of the Hadnot

Point and New River water distribution systems from October 1980 through December 1981. The objective of sampling the water systems at Camp Lejeune and other Marine Corps facilities was to evaluate TTHM levels prior to the scheduled implementation of regulatory requirements.

On October 21, 1980, the base conducted TTHM sampling of the Hadnot Point and New River water distribution systems. USAEHA laboratory personnel developed TTHM Surveillance Reports to record the TTHM analytical results, which presumably were submitted to LANTDIV. The October 1980, December 1980, January 1981, and March 1981 TTHM Surveillance Reports indicated that water samples collected during these months contained chlorinated hydrocarbons that interfered with TTHM analyses. These results were the first indication that chlorinated hydrocarbons were present in the drinking water systems at Camp Lejeune. A summary of the hand-written notes for the TTHM Surveillance Report Forms is provided in Figure 2.

Figure 2: Notes of 1980–1981 Hadnot Point TTHM Analyses

Title	Note
TTHM Surveillance Report Form Camp Lejeune–Hadnot Point, collected 10/21/1980 (USAEHA, 1980)	"Water is highly contaminated with low molecular weight halogenated hydrocarbons. Strong interference in the region of $CHCl_2Br$."
TTHM Surveillance Report Form Camp Lejeune–Hadnot Point, collected 12/18/1980 (USAEHA, 1980)	"Heavy organic interference at CHCl2Br. You need to analyze for chlorinated organics by GC/MS."
TTHM Surveillance Report Form Camp Lejeune–Hadnot Point, collected 01/29/1981 (USAEHA, 1981)	"You need to analyze for chlorinated organics by GC/MS."
TTHM Surveillance Report Form Camp Lejeune–Hadnot Point, collected 02/26/1981 (USAEHA, 1981)	"Water highly contaminated with other chlorinated hydrocarbons (solvents)!"

No additional notes were included in the April 1981 and June 1981 TTHM Surveillance Report Forms, and no subsequent TTHM Surveillance Report Forms for Hadnot Point were identified in the available documents. All of the TTHM Surveillance Report Forms were signed by William C. Neal Jr., Chief, Laboratory Services. According to Mr. Neal, all copies of cover letters and analytical reports were provided to his major for signature and distribution to the facilities. Copies of the

original cover letters for these documents were not available for the Panel's review, and Mr. Neal does not recall to whom the letters were addressed (Neal Interview). There is no documentation that these reports were sent to Camp Lejeune directly. According to a memorandum from Ms. Betz dated February 12, 1982, Camp Lejeune requested copies of the TTHM results from LANTDIV in July 1981. In this memorandum, Betz wrote:

> *"Due to the location of the Chemical Dump and the results of analyses in the area of the Dump, in July 1981, Jerry Wallmeyer of LANTDIV arranged with the Army to increase the trihalomethane surveillance to include the Rifle Range Water System. Jerry Wallmeyer stated that surveillance had been arranged to continue through December 1981. At this time, it was learned that LANTDIV had been receiving the results and were holding them until all had come in. We then requested that the results be sent right away. In the cover letter received from LANTDIV with the results, LANTDIV stated that no action should be taken on Camp Lejeune's part until LANTDIV made their recommendations in December 1981."*

A letter dated August 26, 1981, from LANTDIV to Camp Lejeune Assistant Chief of Staff for Facilities indicated that the TTHM Surveillance Reports were attached per the Camp Lejeune request (Bailey, 1981). Interviews present conflicting information about the dates Camp Lejeune personnel knew of the 1980–1981 sampling results. The Panel does not have a copy of the enclosed reports and does not know if the reports included Mr. Neal's handwritten notes.

It is likely that someone at LANTDIV reviewed Neal's reports but did not act. Jennings Laboratory reports show Mr. David Goodwin, a LANTDIV civil engineer, as the recipient. Mr. Goodwin denies seeing the reports (Goodwin Interview). In an interview with Jim Bailey, Head of Environmental Programs at LANTDIV, Mr. Bailey noted that Mr. Goodwin may have arranged the contract with Jennings and that is why his name appears on the results (Bailey, 2004). Mr. Bailey thought the analysis reports would have been directed to Steve Azar, the Head of Water Quality at LANTDIV, for review. James Chen, a water engineer who worked for Mr. Azar, stated that he and Mr. Azar read reports from numerous laboratories. Mr. Chen reported that he had no memory of reviewing drinking water analysis reports from Fort McPherson or Jennings Laboratories regarding Camp Lejeune during the time period in question (Chen, 2004). Mr. Azar stated that water analyses were not sent to LANTDIV directly; he would only review documents sent by specific installations for advice. Mr. Azar did recall meeting with Camp Lejeune NREAD personnel about different environmental issues. He recalled that Camp Lejeune was having trouble complying with new TTHM requirements. Mr. Azar did not remember specific information about VOC interference in TTHM samples. He stated that he documented every visit with the name of the person with whom

he met, what they discussed, and his recommendations (Azar Interview). The Panel has not seen these reports.

In a letter from LANTDIV to the Camp Lejeune Commanding General date stamped February 12, 1982, the findings of the TTHM monitoring program were discussed (Bailey, 1982). The discussion was limited to compliance with TTHM regulatory requirements, and no mention was made of the USAEHA findings regarding chlorinated hydrocarbons in the Hadnot Point water system.

3.3.2 Camp Lejeune TTHM Sampling and Analysis (1982–1983)

In February 1982, LANTDIV directed Camp Lejeune to begin TTHM monitoring using a laboratory certified by North Carolina. Camp Lejeune initiated this TTHM sampling in April 1982, using Grainger Laboratories. Grainger provided the first sampling report in April 1982, which summarized TTHM tests performed on samples taken at various points in the base's water supply system (Grainger Memorandum, August 1982). No individual wells were sampled. Chemists at Grainger Laboratories directed these reports to Ms. Betz, the supervisory chemist at Camp Lejeune.

The base collected monthly samples from the eight Camp Lejeune drinking water supply systems in April, May, June, and July 1982. Grainger contacted Ms. Betz by phone on May 6, 1982 to inform her that interferences from chlorinated hydrocarbons were apparent during the analysis of water samples from the Tarawa Terrace and Hadnot Point water systems (Grainger Laboratory, 1982). In a memorandum dated May 25, 1982, Ms. Betz indicates that on May 14, 1982, she briefed Lt. Col. Fritzgerald and Col. Millace on the April 1982 TTHM analysis from Grainger. The memorandum states the following:

> *"Col. Millace requested that a summary be prepared and submitted to him with the future trihalomethane analysis. No mention was made of extra peaks that Grainger found in the Tarawa Terrace and Hadnot Point Systems samples."*

In July 1982, base personnel collected additional water samples from the Tarawa Terrace and Hadnot Point drinking water systems for analysis by Grainger to identify the suspected chlorinated hydrocarbons. At this time, Grainger also analyzed water samples it had retained from a May 1982 TTHM sampling event to identify the specific chlorinated hydrocarbons detected in previous analyses. In August 1982, Camp Lejeune received analytical results that quantified TCE and PCE concentrations.

According to a memorandum from Ms. Betz to her supervisor, Mr. Sharpe, dated August 19, 1982, Grainger Laboratory reported interference from unknown chlorinated hydrocarbons during the analyses of water samples taken from the Tarawa Terrace and Hadnot Point water systems to Ms. Betz during a May 6, 1982, telephone conversation (Betz, August 1982). Grainger reported the results of the additional analyses of the Hadnot Point and Tarawa Terrace drinking water samples for TCE and PCE in a letter to the Commanding General of Camp Lejeune (carbon copied to Ms. Betz) dated August 10, 1982. This letter starts with the following discussion:

> *"Previously all samples from site TT and HP presented difficulties in performing the monthly Trihalomethane analyses. Interferences which were thought to be chlorinated hydrocarbons hindered the quantification of certain Trihalomethanes. These appeared to be at high levels and hence more important from a health standpoint than the total Trihalomethane content. For these reasons we called the situation to the attention of Camp Lejeune personnel."* (Grainger Laboratory, 1982).

TCE concentrations at Hadnot Point averaged 20 µg/L with one outlier at 1,400 µg/L; PCE concentrations at Tarawa Terrace ranged from 76–104 µg/L. The TCE levels in the Hadnot Point water were below the long-term TCE SNARL, and the PCE levels in the Tarawa Terrace water system averaged slightly above the PCE SNARL (Grainger Memorandum, August 1982). Analytical results reported in this letter are summarized in the Figure 3. More extensive sampling results are provided in Attachment D.

Figure 3: Spring 1982 Sampling Data

Sample	Date Collected	Result (µg/l)	
		TCE	PCE
Tarawa Terrace 206	7-27-82	—	76
Tarawa Terrace 207	7-27-82	—	82
Tarawa Terrace 86	5-27-82	—	80
Sample	**Date Collected**	**Result (ug/l)**	
		TCE	**PCE**
Tarawa Terrace 168	7-27-82	—	104
Hadnot Point 208	7-27-82	19	<1
Hadnot Point 209	7-27-82	21	<1
Hadnot Point 120	5-27-82	1400	15
Hadnot Point 205	7-27-82	No data	1.0

— Not detected

Routing slips attached to the August 10, 1982 letter indicate it was forwarded to Environmental Affairs with the note:

> *Danny – see AC/S Fac request for interpretation by Betsy* (Ms. Betz).

This document was also sent to the Base Maintenance Office, attention Lt. Col. Calta with the note:

> *Request you have your chemist provide 'lay-man' interpretation of findings.* (Grainger Laboratory, 1982)

Betz's August 19, 1982, memorandum was likely developed in response to the routing request to Environmental Affairs discussed above. In this memorandum, Ms. Betz outlined that neither PCE nor TCE were regulated under the SDWA, but that EPA had developed SNARLs to provide guidance on unregulated contaminants. Ms. Betz concluded that the average levels of PCE detected in the Tarawa Terrace drinking water system were above the recommended SNARL for extended exposure, and the average levels of TCE detected in the Hadnot Point drinking water system were below the recommended SNARLs. A handwritten note attached to the memorandum (apparently from Mr. Sharpe) stated:

> *"Special testing of TT & HP plants for Trichloroethylene & Tetrachloroethylene. Both within limits. Recommend sending data to LANTDIV.* (Betz, 1982)"

There is no record available that indicates if the data was forwarded to LANTDIV.

All TTHM results for water samples taken from April–July 1982 were at or below the regulatory limits that existed at that time, and no regulations were yet in place for TCE and PCE. From these findings, the monitoring frequency for TTHM was reduced from monthly to quarterly for the Tarawa Terrace and Hadnot Point water systems, as well as four of the six other Camp Lejeune drinking water systems. Monthly sampling for TTHM continued for the Rifle Range and New River drinking water systems.

The base analyzed the eight water systems for TTHMs again in November 1982. These samples indicated sporadic interference from VOCs in the samples from the Tarawa Terrace and Hadnot Point water supply systems. According to a memorandum from Ms. Betz to Mr. Sharpe dated December 21, 1982, the Grainger chemist expressed concern that although the interference levels had dropped in the Tarawa and Hadnot Point samples for a brief period (May 1982–July 1982),

levels of interference from chlorinated solvents were relatively high again in the November samples. In the memorandum Ms. Betz stated:

> *"3. When I called Grainger about the error, I talked to Bruce Babson, the chemist who runs our samples. He expressed concern over the solvents that interfer (sic) with Tarawa Terrace and Hadnot Point samples, particularly Hadnot Points (sic). He stated that levels had dropped for a while. However in these last samples the levels were relatively high again."* (Betz, 1982)

All eight water systems were sampled and analyzed for TTHMs again in February 1983 and August 1983. There is no indication that the February results noted VOC interference. The Grainger Laboratory report dated September 16, 1983 provided TTHM data for the samples collected in August 1983 from all eight Camp Lejeune drinking water supply systems. According to the laboratory report, all samples from the Tarawa Terrace water system *"exhibit contamination from Tetrachloroethylene"* and all samples from the Hadnot Point water system *"exhibit contamination from both Trichloroethylene and Tetrachloroethylene"* (Grainger Laboratory, 1983). The laboratory report was addressed to the Quality Control Lab at Camp Lejeune, Attention: Commanding General.

On May 25, 1983, EPA sent a letter to the Office of the Secretary of Defense in response to a letter sent by a Colonel Daley on May 3, 1983 (Hedeman, 1983). This letter outlines EPA's position on TCE levels in drinking water and indicates that EPA was developing a drinking water standard for TCE that would be in the general range of 5–50 µg/L. There is no indication that this letter or the information about TCE was forwarded to Camp Lejeune.

3.3.3 Camp Lejeune Response Actions: Hadnot Point and Tarawa Terrace

Camp Lejeune environmental personnel initiated the Navy Assessment and Control of Installation Pollutants (NACIP) Program at the base in January 1982 with an Initial Assessment Study (IAS). The objective of the IAS was to *"collect and evaluate evidence which indicates existence of pollutants that may have contaminated a site or that pose a potential health hazard for people located on or off an installation."* During the IAS, 75 potential sites were identified at Camp Lejeune, and of those, 22 were considered priority sites that required further study. In July 1984, the base initiated the NACIP Confirmation Study (CS). The Confirmation Study included the sampling of any community water supply well in the vicinity of a priority site, such as Hadnot Point. This is significant, as prior samples were drawn at the water treatment plants or in the distribution system—not from individual wells. The water at the treatment plants was drawn from multiple wells on a rotational basis. The Panel does not have specific information about the rotational schedule of the wells. It does recognize, however, that

when multiple wells provided water to the treatment plants, sampling the water at the treatment plant was not an effective method for determining contamination in individual wells (NACIP, 1983).

3.3.3.1. Closure of Drinking Water Wells at Hadnot Point

In November 1984, the base received results of the NACIP investigation that revealed areas of environmental contamination. Based on a direct association established between contamination in the Hadnot Point water system and the VOCs detected in the drinking water wells, water system operators began shutting down contaminated wells in Hadnot Point in November.

According to a telephone log completed by Robert E. Alexander, who was hired to oversee the NACIP Program at Camp Lejeune, on December 6, 1984, Mr. Bailey of LANTDIV notified Camp Lejeune of analytical results from the NACIP Confirmation Study. According to the log, Mr. Bailey informed Mr. Alexander that benzene and TCE were detected in Hadnot Point well 602. TCE was also found in Hadnot Point wells 601, 602, 603, 608 and in the finished water at Building 20. TCE concentrations ranged from 4.6–1,600 µg/L. The telephone log continued as outlined below:

> *"2. Mr. Bailey informed me that benzene was confirmed in Well. No. 602, from which the pumping has been stopped. Trichloroethylene (TCE) was also found in Well No's. 602, 601, 603, 608, and in the finished water at Bldg 20, the Hadnot Pointe Water Plant. TCE levels at Well No. 603 were so low as not to be of concern at the present time. The test for benzene in the Bldg 20 finished water revealed no detectable level. Well No. 634 was also examined and revealed no detectable levels of volatile organic compounds.*
>
> *3. Mr. Bailey and I agreed that confirmation testing should be initiated as soon as possible at these and other nearby wells in the system. Samples of finished and raw water samples at Bldg 20 should also be analyzed until further notice. Re-sampling of Wells 610, 603, and 608 should also be completed to confirm detection of these compounds.*
>
> *4. Mr. Bailey stated that a message was forthcoming which described a plan of action to address the problem. The plan would include additional sampling of the system and wells to pinpoint the area contaminated.*
>
> *NOTE: After briefing Col Lilley and LtCol Fitzgerald at about 1430, I advised Mr. Cone, BMAIN, to shut down Wells 601 and 608.* (Alexander, 1984)

On December 6, 1984, Hadnot Point wells 601 and 608 were shut down, while well 602 remained offline. The North Carolina Division of Health's records indicated that they were formally notified of the VOC contamination on December 10, 1984 (Bell Memorandum, December 1984). Three days later, the base newspaper published its first story about water testing, contamination, and corrective actions (Goodwin Memorandum, January 1985).

On December 14, 1984, Hadnot Point wells 634 and 637 were also shut down. On February 4, 1985, Camp Lejeune received the January 1985 sampling results, which revealed that well 651 in Hadnot Point contained 400 µg/L PCE, 18,900 µg/L TCE, and 8,070 µg/L DCE. The well was immediately taken off line.

3.3.3.2. Closure of Drinking Water Wells at Tarawa Terrace

In January 1985, Camp Lejeune decided to test all drinking waters wells for VOCs. On February 8, 1985, well TT-23 (drilled in 1984) and TT-26 were closed in response to contamination detected in these wells. A Camp Lejeune staff report discussed the closure of wells TT-23 and TT-26 and projected a 300,000-gallon per day shortage of water due to the well closures. It recommended extending an auxiliary line from Brewster Boulevard (Holcomb Boulevard water distribution system) to Tarawa Terrace, as well as imposing water conservation restrictions *"due to the inability to meet water demand without these wells."* (Summary of December 1984 water sampling at Hadnot Point, 1984).

In March 1985, Camp Lejeune developed a plan to construct an 8-inch emergency auxiliary water line from the Holcomb Boulevard water treatment plant to Tarawa Terrace to compensate for water shortages caused by well closures in the Tarawa Terrace water system. This project was completed in June 1985, resulting in the lifting of water restrictions at Tarawa Terrace and closure of all Tarawa Terrace wells. In July 1985, the base began a project to expand the Holcomb Boulevard water treatment plant from 2 to 5 million gallons per day (MGD) to meet the additional water demand from the Tarawa Terrace system. This project, completed in March 1987, provides water to the Tarawa Terrace system.

On May 15, 1985, the NCDEM issued a Notice of Violation (NOV) to the Commanding General at the Camp Lejeune. The NOV, based on regulations effective September 1984, was issued in response to data developed in the NACIP CS, which identified ten drinking water supply wells contaminated with organic compounds. As stated earlier, Camp Lejeune had initiated the CS that identified the contaminants in July 1984. The NOV identified eight Hadnot Point water supply wells (HP-601, HP-602, HP-603, HP-608, HP-634, HP-637, HP-642, and HP-651) and two Tarawa Terrace water supply wells (TT-26 and TT-23) contaminated with organic constituents, including PCE, TCE, 1,2-trans-dichloroethylene, methylene chloride, vinyl chloride, 1,1-dichloroethane,

benzene, toluene, and dichlorobenzene. The NCDEM NOV concluded that the contamination identified in the Tarawa Terrace wells likely originated from a nearby dry cleaner (ABC Cleaners), as opposed to Camp Lejeune operations (Von Oesen and Associates, 1979). Camp Lejeune had already shut down the wells cited in the NOV in November and December 1984 and February 1985.

3.3.3.3. USMC Public Communications Regarding Hadnot Point And Tarawa Terrace Water Systems (1980–1985)

This section provides a summary of the actions Camp Lejeune took to notify the public of the contaminants associated with the Hadnot Point and Tarawa Terrace drinking water systems through 1985.

December 1984: According to a memorandum from the North Carolina Division of Health Services (NCDHS), Camp Lejeune contacted NCDHS by telephone on December 10, 1984 regarding suspected contamination of four wells. The memorandum indicated that the wells were removed from service, that a re-sampling program would be initiated by Camp Lejeune, and that *"some form of information may be released to the public."* According to a written response developed by Marine Corps Headquarters to questions from *The Washington Post* (September 11, 2003):

> *"Two days after contacting the North Carolina's Division of Health Services, Camp Lejeune began to notify its residents on Dec 13, 1984. An article in Camp Lejeune [sic] The Globe, 'Camp Lejeune Water Testing Underway,' described the sampling efforts to test water base-wide as a result of water samples taken on Dec 3 at Hadnot Point Industrial Area, which were found to contain organic compounds."*

In addition, a memorandum dated January 4, 1985 indicated that the MCB Commanding General provided a press conference on December 14, 1984 as part of the "Response to MCB VOC Problem" (U.S. Marine Corps Camp Lejeune, 1984).

December 1984 (estimated): A document entitled *Questions and Answers Relative to Wells at Camp Lejeune* appears to have been distributed as a press release or prepared in preparation of a press release. Based on the content, the document appears to have been developed in the December 1984 timeframe, but it could have been developed later. The content, limited to the Hadnot Point well system, discussed the detection of VOCs in Hadnot Point wells 602 (primarily), 601, and 608, and outlined that the contaminants were discovered as part of the NACIP Confirmation Study. In response to the question of what was currently being done, the document stated:

> *Well 602 hasn't been used since 11/21—it was shut down as part of regular rotation of ten or so wells that supply the main plant for Hadnot Point. We are developing a change order to the Confirmation Study to step up the sampling of all wells in the Hadnot Point area. We have recommended that Camp Lejeune shut down Wells, 601, 602, 608 immediately; retest all previously sampled wells in the area, initiate daily sampling of the main plant.* U.S. Marine Corps Base Camp Lejeune, 1984)

April 1985: On April 30, 1985, the USMC at Camp Lejeune issued a "Notice to Residents of Tarawa Terrace" regarding problems with the water supply. According to the notice:

> *Two of the wells that supply Tarawa Terrace have had to be taken off line because minute (trace) amounts of several organic chemicals have been detected in the water. There are no definitive State or Federal regulations regarding safe levels of these compounds, but as a precaution, I have ordered the closure of these wells for all but emergency situations when fire protection or domestic supply would be threatened.*

The notice requested that residents take active measures to reduce domestic water use until early June when construction of an auxiliary water line from the Holcomb Boulevard water treatment plant would be completed (U.S. Marine Corps Base Camp Lejeune, 1985).

May 1985: Camp Lejeune provided a press release on May 9, 1985 that informed the general public of the water situation at Camp Lejeune. The *Jacksonville Daily News* (Smith, 1985) and the *Wilmington Morning Star* (Long and Brennan, 1985) ran related stories on May 10, 1985 and May 11, 1985, respectively.

September 1985: A September 15, 1985 article in the *Raleigh News and Observer* provided a summary of the ongoing investigation and groundwater contamination at Camp Lejeune. The article also stated:

> *Camp Lejeune authorities in May notified base residents and water customers of the contaminants with leaflets and articles in the base newspaper.* (Allegood, 1985)

3.4 Detailed Findings

After review and analysis of the available information, the Panel finds the following:

1. **Camp Lejeune provided drinking water to base residents that was of a quality consistent with general water utility practices in light of the evolving regulatory requirements at the time.**

   Responses from all levels of Camp Lejeune personnel must be considered in the context of the contemporary scientific knowledge and regulatory framework that existed in the early 1980s. Faced with rapidly changing U.S. water quality regulations and practices during that time, Camp Lejeune personnel responded, but not expeditiously, to the contamination situation that confronted them. Although some utilities in the United States did take a progressive stance and acted to eliminate or treat VOC-contaminated sources before being mandated to do so, this was not common practice. The Panel's review indicated that Camp Lejeune's practices were consistent with the regulatory requirements, water industry practices, and military protocols of 1980–1985. As a result, base residents received water that was comparable in quality to water provided by average civilian water utilities and other military base water systems.

2. **Camp Lejeune made every effort to comply with existing water quality regulations and related schedules, but did not anticipate or independently evaluate health risks associated with chemicals that might be subject to future regulation. In 1980, there was developing concern about the potential health effects of exposure to TCE and PCE, and the EPA was just beginning to move toward establishing standards by issuing "suggested no-adverse response levels" for these chemicals.**

   Camp Lejeune's sampling program for microbiological contaminants, lead, and total trihalomethanes—the emerging contaminants of concern of the early 1980s—reflects the standard practice of most water utilities at that time, i.e., to establish monitoring and compliance programs for contaminants *only after* regulatory standards had been issued. Similarly, military bases would not budget expenditures to control contaminants *until* compliance and monitoring standards had been promulgated for those contaminants. At the time that VOCs were first detected at Camp Lejeune, EPA had not established drinking water standards for TCE and PCE. Therefore, the operation of Camp Lejeune's water

supply system during 1980–1985 did not include regular sampling and analysis for these contaminants.

3. Confounding factors that appear to have hindered Camp Lejeune personnel from quickly recognizing the significance of the VOC contamination include the following: the absence of regulatory standards, no records of resident complaints about water quality, sampling errors, and inconsistent sampling results attributable to a multiple-well system that diluted or masked evidence of significant contamination from any one source.

In the early 1980s, Camp Lejeune conducted sampling on finished (blended and treated) drinking water at the water treatment plants or distribution locations, which was a mixture of water drawn from numerous wells on a rotational basis. This multiple-well rotation system contributed to apparently inconsistent VOC sampling results or anomalies because the VOC concentration in the samples would fluctuate depending upon the wells that were in operation at the time. In 1984, Camp Lejeune began sampling *individual* wells, as opposed to finished drinking water at the water treatment plants, as part of the NACIP Confirmation Study. This new sampling practice revealed the extent of VOC contamination and provided confirmation on the locations affected by VOCs.

In the course of reviewing the "Summary of Analytical Data" (Attachment D), it appears that the sampling results confused base personnel since the results varied over time.

On May 27, 1982, the only high TCE reading (1,400 μg/L) occurred at Hadnot Point. To be considered significant, the result would have to be confirmed through further sampling. The May 27, 1982 samples from three locations on Hadnot Point, however, averaged only 20 μg/L. The base analyzed the eight water systems for TTHMs again in November 1982, and analyses indicated higher levels of VOC at Hadnot Point and Tarawa Terrace. Of the 11 samples drawn from the Hadnot Point treatment plant in December 1984, ten showed concentrations less than 10 μg/L, while one showed a concentration of 190 μg/L. This was followed by a peak of 900 μg/L in January 1985.

4. **LANTDIV, as a technical advisory organization, apparently was not aggressive in providing Camp Lejeune's Environmental Division with technical expertise to understand the significance of the VOCs and how they could have been addressed.**

LANTDIV's role was to provide technical expertise to Camp Lejeune personnel and advise them on how to address and verify the indications of VOCs in the sampling results. In 1980 and 1981, four laboratory analytical reports contained notes alerting LANDTIV to the presence of VOCs and recommended further study. Such studies, however, were not undertaken, nor did Camp Lejeune have the equipment or expertise to conduct the suggested analyses. The Panel's investigation found no evidence of LANTDIV's responses to these analytical report notes nor any follow-up actions or recommendations.

5. **Inadequate funding, staffing, and training of Camp Lejeune's Environmental Division, combined with the Division's compliance-based approach to regulations, contributed to a lack of understanding about the potential significance of the VOCs identified in the drinking water in the early 1980s.**

The Environmental Division monitored Camp Lejeune's water quality through a basewide, large-scale compliance program that involved continual and repetitive samplings. Environmental Division personnel, tasked with the routine sampling and testing of Camp Lejeune's water supply, relied on other organizations, such as Preventive Medicine and LANTDIV, for regulatory and scientific information and direction on emerging water contamination issues. In interviews conducted with Environmental Division personnel, they consistently revealed that the organization was given a low priority by base leadership and did not have the appropriate equipment or qualified personnel to test for solvents until 1984. Interviewees also confirmed that TTHM testing was the Environmental Division's main priority at that time. Interviewees repeatedly stated that they did not understand the significance of the laboratory results. One interviewee also stated that although in-service training was provided, it focused on new laws and regulations and did not address solvent issues or groundwater contamination.

The lack of quick and aggressive response to initial chemical interferences, later determined to be VOCs, in some drinking water samples was unfortunate. The priority for responding to initial indications of unknown contaminants was low, and the Environmental Division's

compliance-based approach contributed to personnel not questioning the significance of these signs and pursuing them within the Camp Lejeune organization.

6. Communications among Camp Lejeune's water system operators, the Preventive Medicine Department, the Environmental Division, and LANTDIV were inadequate.

The lack of coordination among Camp Lejeune's water system operators, Preventive Medicine, Environmental Division, and LANTDIV resulted in the poor communication of drinking water contamination issues to the residents of Camp Lejeune. Despite this inadequate communication network, both internally within Camp Lejeune and between Camp Lejeune and LANTDIV, a more apparent and urgent contamination incident likely would have generated more effective dissemination of information. For example, the gasoline leak that occurred in the Holcomb Boulevard system in January 1985 generated an effective communications response. Therefore, had Camp Lejeune personnel been more knowledgeable about the nature and extent of the VOC contamination, it would have been of higher priority and might have resulted in better communication among Camp Lejeune's Preventive Medicine, Environmental Division, various water system operators, and LANTDIV.

7. Communications to Camp Lejeune residents regarding drinking water contamination did not fully characterize the contaminant levels found at the time of the well closures.

Camp Lejeune's April 30, 1985 notice to residents of Tarawa Terrace characterized the levels of *"several organic chemicals"* in the water supply as *"minute (trace) amounts"* although tests were showing results, albeit inconsistent, ranging up to 1,580 μg/L. The public release also noted that the well closures were being taken as a *"precaution,"* although *"there are no definitive state or federal regulations regarding a safe level of these compounds."* A May 11, 1985 news report said that *"Camp Lejeune should not worry about getting bad drinking water"* in the opinion of the head of North Carolina's Water Supply Branch, who added, *"I think we kind of caught it right at the beginning. It's not something that has been running for two or three years."*

8. The Panel found the Marine Corps acted responsibly, and saw no evidence of Marine Corps attempts to cover up information that indicated contamination in Camp Lejeune drinking water.

Notwithstanding the water system operators' lack of understanding of the significance of VOC interferences in TTHM samples, the Panel found no evidence of attempts to conceal sampling data that were later found to be indicators of VOCs. Furthermore, Camp Lejeune's sampling protocol for TTHM testing in drinking water provides evidence of no attempt to cover up the presence of contaminants in drinking water supply systems. Given that more than two decades have passed since the initial indications of VOC contamination, a lack of complete information on related decisions was expected. The scope of the Panel's interviews and research makes it unlikely that new information coming to light would indicate a cover-up.

ATTACHMENT A

Charter for the Fact Finding Panel to Review Issues Surrounding the Camp Lejeune Water Supply from 1980-1985

A. Official Designation: Fact Finding Panel to Review Issues Surrounding the Camp Lejeune Water Supply from 1980-1985 (Panel).

B. Objective and Scope of Activity: Conduct an independent review of the facts surrounding the decisions made following the 1980 discovery of volatile organic compounds in drinking water at Marine Corps Base, Camp Lejeune. The Panel shall focus its efforts on, but not be limited to, the period beginning with the 1980 discovery of volatile organic compounds in some of the base's drinking water and concluding with the closure of affected wells in 1985. The Panel shall report its findings, in writing, to the Commandant of the Marine Corps.

C. Period of Time Required: The Panel shall commence its work on a date selected by the Commandant of the Marine Corps. It is estimated that the Panel will require six months after work commences.

D. Official to Whom the Panel Reports: The Commandant of the Marine Corps.

E. Membership**:** The panel will be composed of three core members. The Honorable Ronald Packard will serve as Panel Chair. The Honorable Robert Pirie, Jr. and General Richard Hearney (USMC, Retired) complete the Panel's core membership. The Panel may also appoint additional independent experts to assist in their review, as appropriate.

F. Duties and Responsibilities: The Panel shall conduct an independent review of the facts surrounding the decisions made following the 1980 discovery of volatile organic compounds in drinking water at Marine Corps Base, Camp Lejeune. The Panel shall focus its efforts on, but not be limited to, the period beginning with the 1980 discovery of volatile organic compounds in some of the base's drinking water and concluding with the closure of affected wells in 1985. The Panel shall conduct its review in a reasonable and appropriate manner consistent with this Charter. The review shall include, but not be limited to, interviews with current and past base personnel and representatives of cognizant regulatory agencies.

The Panel is urged to consider soliciting public comment in fulfilling its duties.

The Panel shall report its findings, in writing, to the Commandant of the Marine Corps within an estimated six months after commencing its review. The Panel is solely responsible for the report's contents. The form of this report shall be reasonable and appropriate, as determined by the Panel.

G. Support Agency: Headquarters, Marine Corps will provide funding for the Panel. Headquarters, Marine Corps will provide the Panel with logistical and other staff support upon the Panel's request.

H**.** Funding: Headquarters, Marine Corps will provide funding to establish and support the Panel.

I. Number of Meetings: The Panel will meet as often as necessary to fulfill its duties within an estimated six months after commencement.

J. Termination Date: The Panel shall terminate thirty days after submitting its report to the Commandant of the Marine Corps.

ATTACHMENT B

Panel Biographical Summaries

Hon. Ronald C. Packard, Chairman – Mr. Packard represented California's 48th District in the United States House of Representatives until from 1982 to 2001. He served on the Appropriations Committee, where he chaired the subcommittees on Energy and Water Development; Military Construction; and the Legislative Branch. Mr. Packard also held seats on the Public Works and Transportation and the Science, Space and Technology committees. Before his election to Congress, he served as mayor of Carlsbad, Calif.

Jerome B. Gilbert, P.E. – Mr. Gilbert advises on water management, treatment and protection issues, as well as groundwater remediation, for municipal and state governments and federal agencies. Before forming his own consulting engineering firm in 1991, he was general manager and chief engineer of the East Bay Municipal Utility District in California. Earlier, as executive officer of the California State Water Resources Control Board, he helped develop laws that were the basis for the federal Clean Water and Safe Drinking Water acts. He is familiar with water system practices worldwide and holds leadership positions in a number of industry organizations.

Gen. Richard D. Hearney (USMC, Ret). – Gen. Richard D. Hearney, USMC (Ret.), served in the military for 35 years before retiring as Assistant Commandant of the Marine Corps and joining the Boeing Company as Vice President for Military Aircraft and Missile Systems Group. Gen. Hearney then served as President and CEO of Business Executives for National Security (BENS), a national, nonpartisan organization of business leaders. An aviator and combat veteran in Vietnam and Desert Shield and Desert Storm, Gen. Hearney has participated in a number of special security studies and commissions, including the National Defense Panel. Most recently he was a member of the Blue Ribbon Panel that recommended ways the San Jose, California Airport can use technology to improve security; Secretary of Defense Donald Rumsfeld's Special Study of Defense Logistics; and the Council on Foreign Relations' Task Force on Non-Lethal Weapons. He currently serves on the Defense Science Board Mobility Panel.

Hon. Robert B. Pirie Jr. – Mr. Pirie has more than 40 years of experience in the armed forces, government and industry. He served as acting secretary of the Navy during 2000-2001 and was previously undersecretary of the Navy and assistant secretary of the Navy for installations and environment. Mr. Pirie's government service also included management positions with the Department of Defense with responsibility for manpower, reserve affairs and logistics, and with the Congressional Budget Office as deputy assistant director, national security. Before entering government service in 1975, he served in the United States Navy for 20 years, during which time he commanded a nuclear attack submarine.

Robert G. Tardiff, Ph.D., ATS – Dr. Tardiff is co-founder and president of The Sapphire Group, a Maryland-based company that specializes in applying scientific techniques to identifying and analyzing health risks in the environment and the workplace. Dr.

Tardiff was previously chief of the U.S. Environmental Protection Agency's Toxicological Assessment Branch and executive director of the National Academy of Sciences/National Research Council Board on Toxicology and Environmental Health Hazards. He holds a certification as a Fellow from the Academy of Toxicological Substances.

ATTACHMENT C

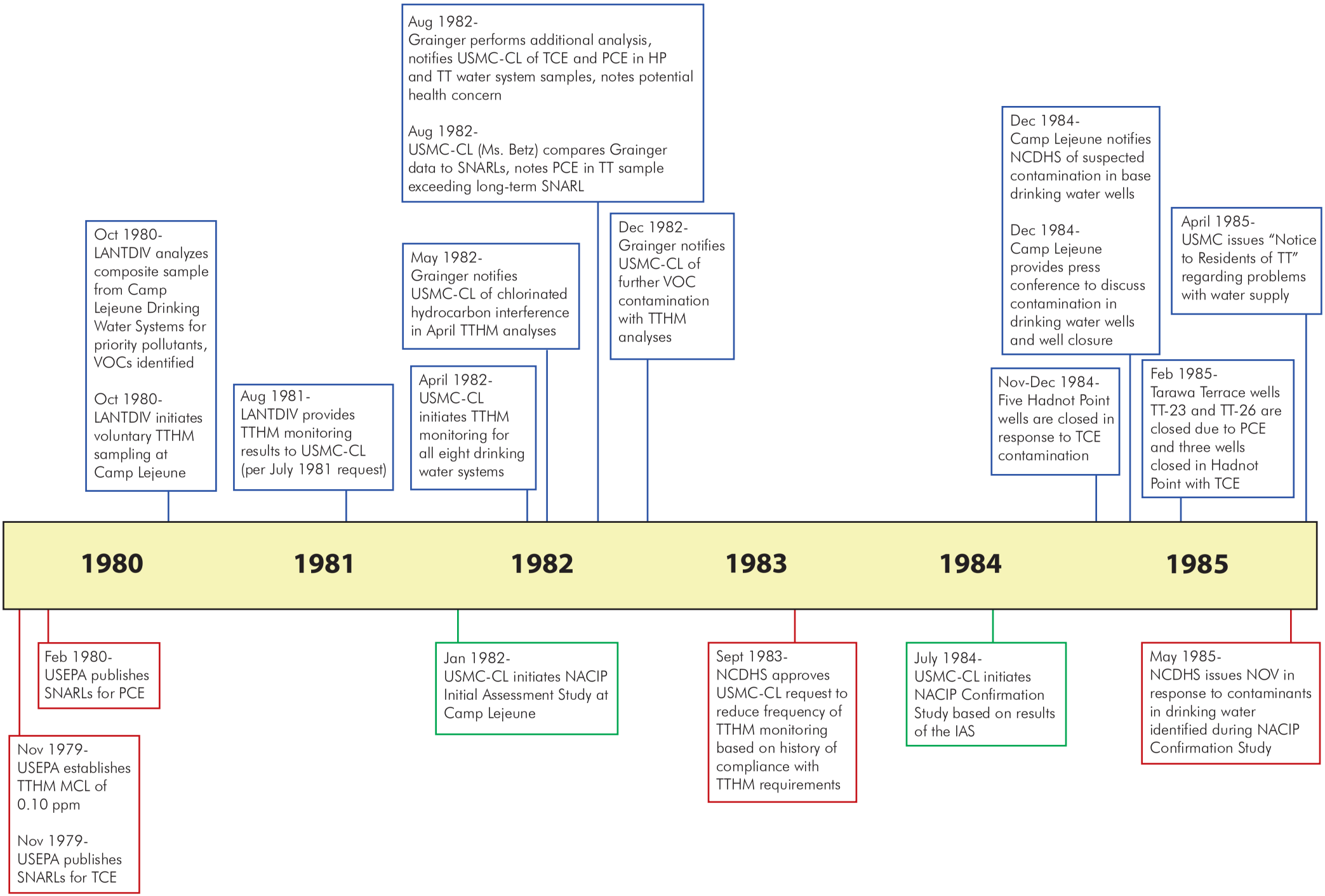
Oct 1980-
LANTDIV analyzes composite sample from Camp Lejeune Drinking Water Systems for priority pollutants, VOCs identified
Oct 1980-
LANTDIV initiates voluntary TTHM sampling at Camp Lejeune
Aug 1981-
LANTDIV provides TTHM monitoring results to USMC-CL (per July 1981 request)
May 1982-
Grainger notifies USMC-CL of chlorinated hydrocarbon interference in April TTHM analyses
April 1982-
USMC-CL initiates TTHM monitoring for all eight drinking water systems
Aug 1982-
Grainger performs additional analysis, notifies USMC-CL of TCE and PCE in HP and TT water system samples, notes potential health concern
Aug 1982-
USMC-CL (Ms. Betz) compares Grainger data to SNARLs, notes PCE in TT sample exceeding long-term SNARL
Dec 1982-
Grainger notifies USMC-CL of further VOC contamination with TTHM analyses
Dec 1984-
Camp Lejeune notifies NCDHS of suspected contamination in base drinking water wells
Dec 1984-
Camp Lejeune provides press conference to discuss contamination in drinking water wells and well closure
Nov-Dec 1984-
Five Hadnot Point wells are closed in response to TCE contamination
Feb 1985-
Tarawa Terrace wells TT-23 and TT-26 are closed due to PCE and three wells closed in Hadnot Point with TCE
April 1985-
USMC issues "Notice to Residents of TT" regarding problems with water supply
1980
1981
1982
1983
1984
1985
Feb 1980-
USEPA publishes SNARLs for PCE
Nov 1979-
USEPA establishes TTHM MCL of 0.10 ppm
Nov 1979-
USEPA publishes SNARLs for TCE
Jan 1982-
USMC-CL initiates NACIP Initial Assessment Study at Camp Lejeune
Sept 1983-
NCDHS approves USMC-CL request to reduce frequency of TTHM monitoring based on history of compliance with TTHM requirements
July 1984-
USMC-CL initiates NACIP Confirmation Study based on results of the IAS
May 1985-
NCDHS issues NOV in response to contaminants in drinking water identified during NACIP Confirmation Study

ATTACHMENT D

Pre-1984 Camp Lejuene Well Data

Well Name	Installation Date	Yield (Gallons per Minute)
HADNOT POINT		
HP-37 (H-37)	<1942	
HP-604	<1942	
HP-624	<1965	
HP-627 (HP-661)	<1965	175
HP-628	<1965	
HP-629	<1965	
HP-630	<1965	
HP-656	<1994	
HP-601(HP20-601)	1941	
HP-602	1941	154
HP-603	1941	150
HP-606	1941	345
HP-608	1941	208
HP-609	1942	150
HP-610	1942	214
HP-611	1942	
HP-611	1942	144
HP-612	1942	170
HP-613	1942	250
HP-614	1942	240
HP-615 (HP20-615)	1942	
HP-616	1942	167
HP-620	1942	280
HP-621	1942	284
HP20-626	1953	
HP-632	1957	349
HP-633	1959	250
HP-634	1959	219
HP-635 (HP20-635)	1959	200
HP-636	1959	154
HP-637	1968	130
HP-638	1968	201
HP-639	1968	
HP-640	1969	290
HP-651	1971	242
HP-641	1972	315
HP-642	1972	156
HP-652	1972	200
HP-653	1978	197
HP-654	1978	200
HP-625	1980	
HP-655	1980	
HP-614	1982	
HP-621	1982	284
HP-623 (HP-611)	1982	300
HP-629	1982	200
HP-638	1982	
HP-660	1983	150
HP-661	1983	175
HP-5186	1984	250
HP-607	1984	289
HP-622	1984	310
HP-628	1984	143
HP-662	1984	200

Pre-1984 Camp Lejuene Well Data

Well Name	Installation Date	Yield (Gallons per Minute)
HOLCOMB BOULEVARD		
HP-LCH 4007	1942	250
LCH 4006 HM1 (HP20-LCH1)	1942	272
HP-647	1970	302
HP-645	1971	192
HP-646 (HP-670-646)	1971	425
HP-649	1971	100
HP-643	1972	269
HP-644 (HP-670-644)	1972	230
HP-648 (HP-670-648)	1972	227
HP-650	1972	480
HP-619	1977	176
HP-630 (HB-650 , HP-670-650	1977	480
LCH-4009	1984	450
MONTFORD POINT		
M-627 (M-627 Z-4)	<1942	
M-630 (M-244)	<1975	
CCC-1	1941	
CCC-2	1942	
M-142 (M178-Z1)	1942	210
M-243 (M178-Z2)	1942	
M-628 (M178-Z5)	1942	
M-168 (M178-Z6)	1953	
M-197 (M-178-197)	1970	
M-629	1975	
M-243 (M178-Z2)	1980	
M-267	1981	
M-161(M-168)	1983	
TARAWA TERRACE		
TT28	<1965	
TT30	<1965	100
TT31	<1965	145
TT31	<1965	145
TT45	<1965	
TT55	<1965	
TT23	<1984	
TT26 (TT38-1)	1960	200
TT52 (TT38-9)	1961	300
TT53	1961	350
TT54 (TT38-11)	1961	200
TT67 (TT38-67)	1971	168
TT38-31	1973	
TT25	1980	

ATTACHMENT E

Individuals Contacted by Panel

1.	Robert Alexander	NACIP Coordinator at Camp Lejeune
2.	Steve Azar	Head of Water Quality at LANTDIV during the 1980s and 1990s
3.	Bruce Babson	Chemist for Grainger Labs in the early 1980s
4.	Jim Bailey	Former Head of Environmental Support Branch, LANTDIV
5.	Elizabeth Betz	Worked at Camp Lejeune as a supervisory chemist from 1979 to mid-1995.
6.	Hoy Burns	Chemist who worked at Camp Lejeune from 1949 to 1990
7.	Bonnie Capito	Librarian in charge of the administrative records of Camp Lejeune
8.	Wallace Carter	Head of Wastewater Treatment Plants, Operator Training Programs, Potable Water, and Engineering Surveys at LANTDIV in 1979
9.	James Chen	Former water quality engineer at LANTDIV
10.	Fred Cone	Electrical engineer who worked in the Utilities Department at Camp Lejeune since 1979
11.	Jerry Ensminger	Former Marine who lived at Camp Lejeune in the 1980s
12.	Mack Frazelle	Water supervisor at Camp Lejeune since 1972
13.	Dave Goodwin	Civil engineer who worked at LANTDIV in the 1980s
14.	Paul Hubbell	Assistant Deputy Commandant, Installations and Logistics (Facilities)
15.	Melton G. Lilley	Assistant Chief of Staff of Facilities at Camp Lejeune in 1983
16.	Kenneth Millice	Colonel assigned to Camp Lejeune in the early 1980s
17.	Fred Mount	Base Maintenance Officer in 1982
18.	William Neal	Chemist at Camp Lejeune in 1980 and 1981
19.	Paul Rakowski	Civil engineer at LANTDIV in the 1980s
20.	George Reynolds	Administrator for Preventive Medicine assigned to Camp Lejeune from 1984-1985 before retiring; returned as a civilian employee in Preventive Medicine in 1986
21.	Danny Sharpe	Former employee at Camp Lejeune from 1979 to 2003
22.	Rick Shiver	Environmental regulator with North Carolina Department of Environment and Natural Resources since 1973
23.	Thomas Townsend	Former Marine who lived at Camp Lejeune
24.	William Waters	Former Marine and civilian employee at Camp Lejeune
25.	Julian Wooten	Former civilian employee at Camp Lejeune from the 1960s to the early 1990s

ATTACHMENT F

Presenters and Individuals Submitting Statements:
Drinking Water Fact-Finding Panel for Camp Lejeune
June 24-25, 2004, Public Meetings
Coastal Carolina Community College, Jacksonville, North Carolina

Mike Andrews

Joy Barker

Jeff Byron

Mary Ruth Byron (statement read by Jeff Byron)

Patsy E. Canady

Terry Dyer

Jerry Ensminger

Michael Gros

Jacquelyn A. Hammond

Ellen Harris

Charles Houssiere

Lita Hyland

Marilyn M. Livingston

Susan Matteson

Paula Orellana

Coley H. Rhodes

Barbara Trimble

William V. Waters

Johnsie Weissenstein

Martin White (statement read by Jerry Ensminger)

ATTACHMENT G

Categories and Number of Documents Retrieved

Document category	Number of Documents Retrieved
Analytical Results *Well sampling results followed by analysis of the data*	145
Applications *Well permit, well construction, water treatment plant applications*	19
Contracts *Contractual and bid and proposal documents for construction and other services*	4
Data *Well sampling data, site maps*	42
Emails *Correspondences involving Camp Lejeune, TCE, PCE and ABC Cleaners*	133
Faxes *Faxes involving Camp Lejeune, TCE, PCE and ABC Cleaners*	31
Interviews *Conversations between private investigator and key personnel involved in sampling activities at Camp Lejeune during the 1980s*	26
Letters *Correspondences from concerned citizens, interested parties, USMC, EPA, USGS, and independent laboratory companies*	580
Memos *Official memos on environmental surveys, TTHM testing, housing areas at Camp Lejeune*	265
Newspaper Articles *Historical articles published on Camp Lejeune activities*	126
Regulations *Federal Register notices, Code of Federal Regulations, State regulations*	26
Reports *Preliminary assessments, ATSDR health reports, Office of Drinking Water health advisories, EPA fact sheets, remedial investigations, feasibility studies*	131
Sampling Logs *Sampling logs of raw/ delivered water to/from treatment facilities*	96
Telephone Logs	7
Miscellaneous	15
TOTAL	**1646**

ATTACHMENT H

CAMP LEJEUNE WATER DISTRIBUTION SYSTEM BY SIZE WITH MATERIAL, TYPE, DATE AND WELL INSTALLATION DATE

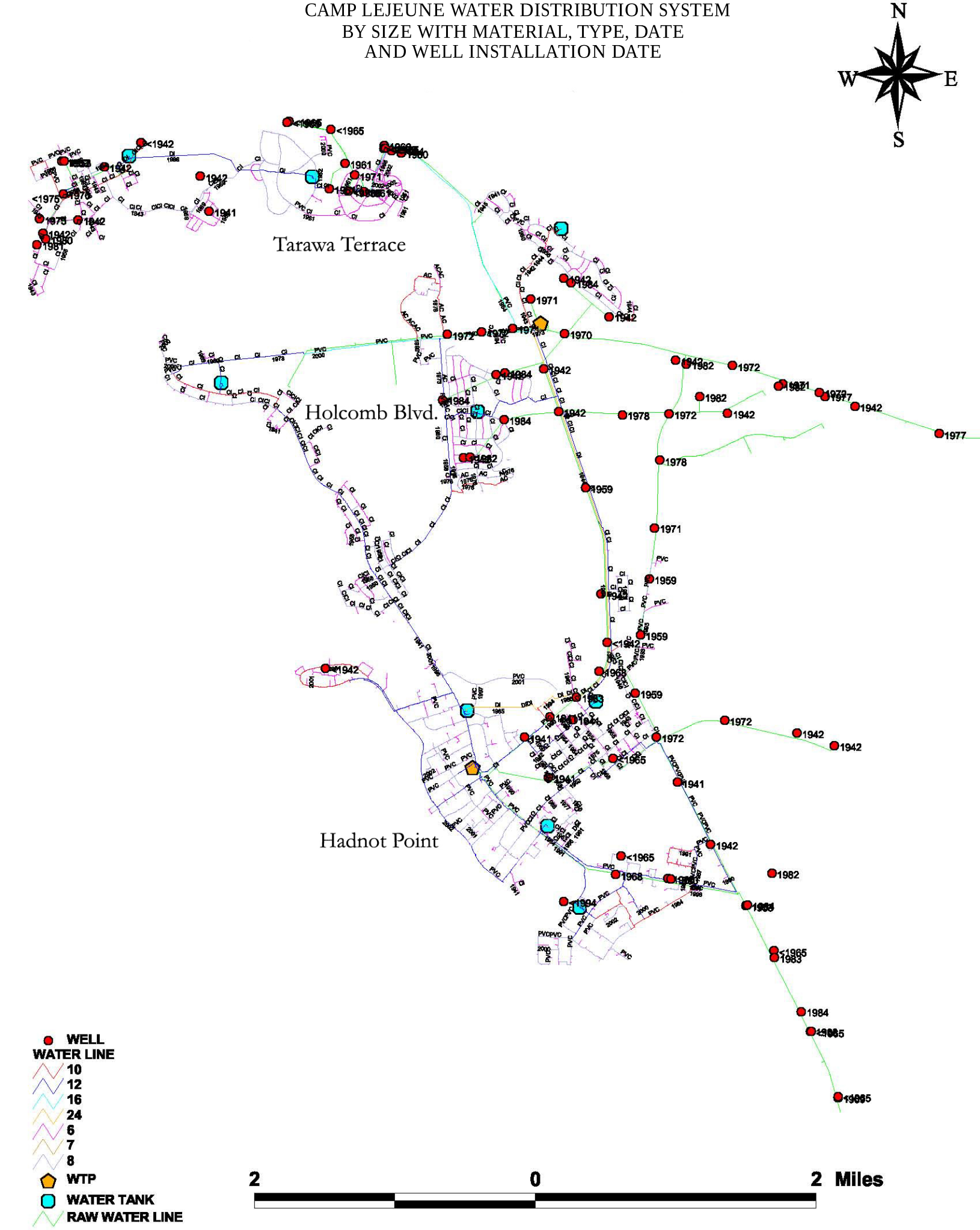

ATTACHMENT I

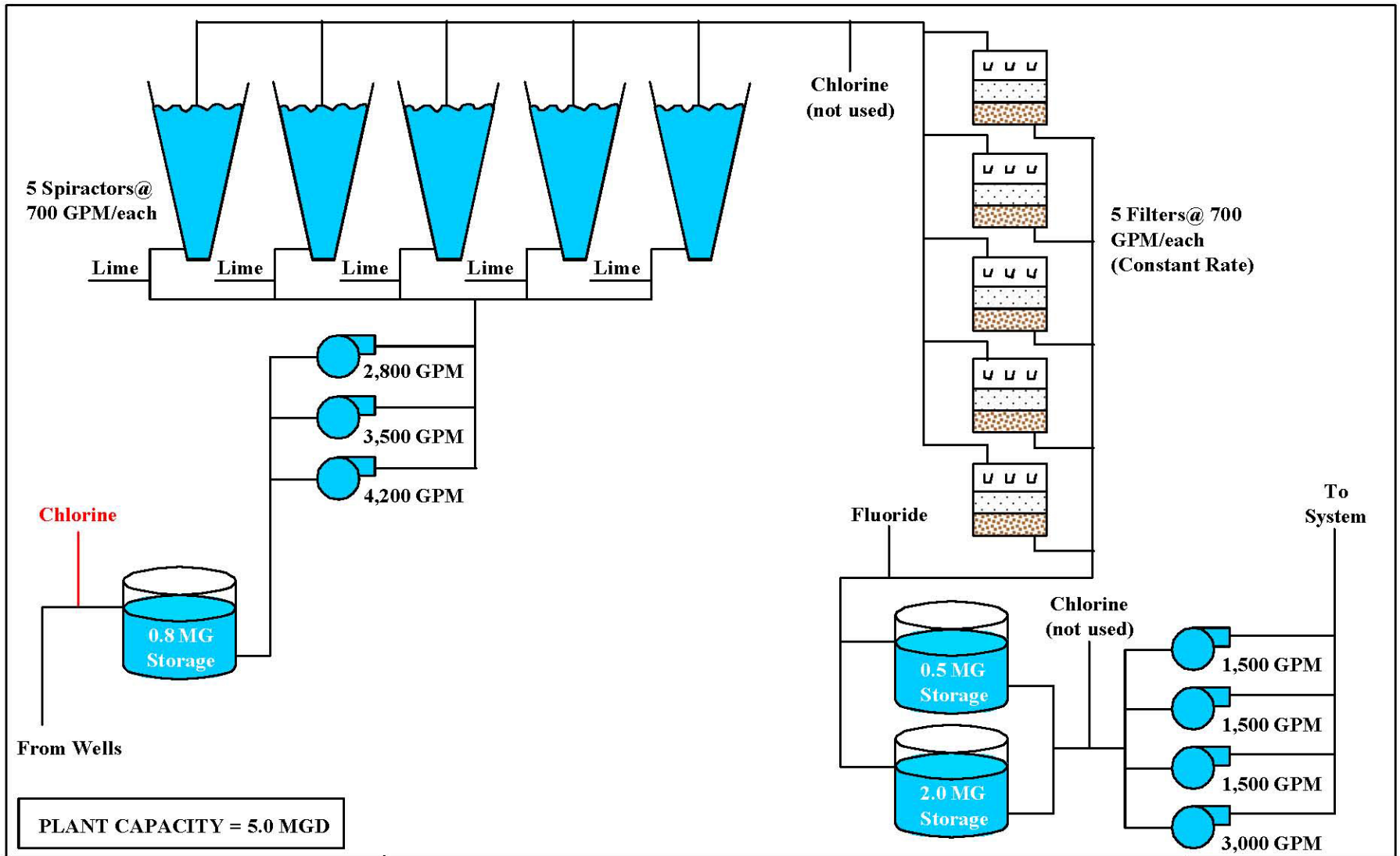

AH Environmental Consultants

Process Schematic
Hadnot Point WTP (Bldg 20)
MCB, Camp Lejeune

ATTACHMENT J

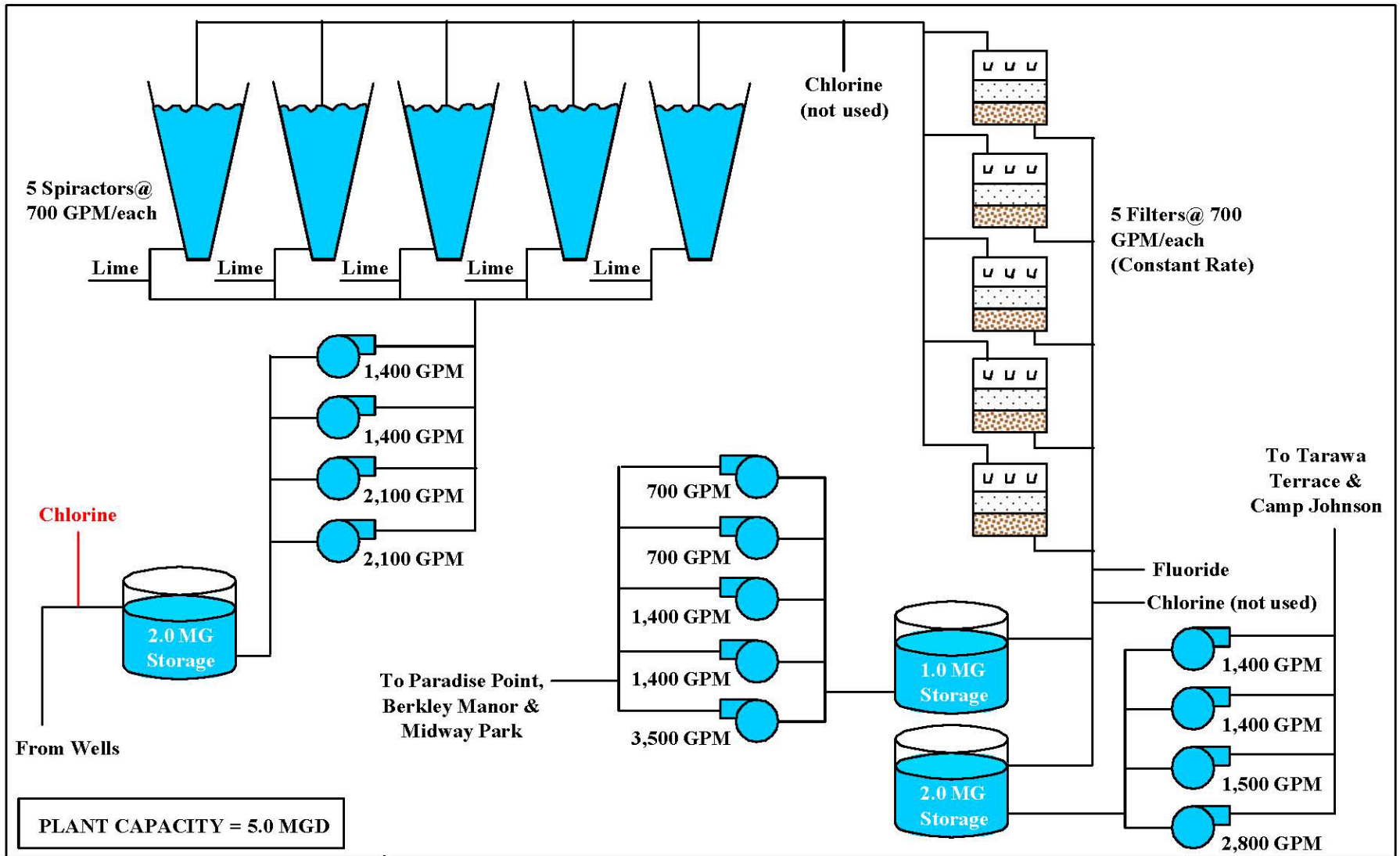

AH Environmental Consultants

Process Schematic
Holcomb Boulevard WTP (Bldg 670)
MCB, Camp Lejeune

ATTACHMENT K

Summary of Analytical Data for Groundwater at Camp Lejeune

Sample Location/Source	Sample Date	Contaminant Concentration* (ug/L)		Document(s) in which data were reported*	Notes
		PCE	TCE		
Composite Sample (water from all 8 water systems)	10/1/1980	<0.07	0.005	CLW 430	Eight samples of water were composited from the following locations: Hadnot Point Bldg 20, Hadnot Point Bldg 670, Tarawa Terrace TT-38, Monford Point M-178, MCAS(H) Bldg 110, Courthouse Bay BB-190, Rifle Range RR-85, and Onslow Beach BA-138.
MOQ 2212 Paradise Point	1/29/1985		**1040.9**	CLW 1426, CLW 4546	
Paradise Point Bldg. 2600	1/31/1985		**890.9**	CLW 4546	
MOQ 2212 Cold Water	1/31/1985		**724.6**	CLW 4546	
MOQ 2212 Hot Water	1/31/1985		**612.9**	CLW 4546	
MOQ 2204 Hydrant	1/31/1985		**839.7**	CLW 4546	
Tank SLCH 4004	1/31/1985		**318.3**	CLW 4546	
Hydrant Elev. Tank S-830	1/31/1985		**849.0**	CLW 4546	
Tank S-2323	1/31/1985		**407.1**	CLW 4546	
BM 5677	1/31/1985		**981.3**	CLW 4546	
BM 5531	1/31/1985		**905.5**	CLW 4546	
MOQ 2204 Hydrant Dist. System	2/7/1985		32.4	CLW 1426, CLW 4546, CLW 4516	Distribution tap sample; treated with chlorination, filtering, and lime. No gasoline hydrocarbons indicated by purge and trap analysis.
HADNOT POINT WATER SYSTEM					
5 locations (WTP, NH-1, 1202, 65, FC-530)	10/21/1980	VOCs detected		CLW 436	Notes made during analysis of TTHMs indicate strong interference at dichlorobromomethane and state, "water is highly contaminated with low molecular weight hydrocarbons."
5 locations (WTP, NH-1, 1202, 65, FC-530)	12/18/1980	VOCs detected		CLW 438	Notes made during analysis of TTHMs indicate heavy organic interference at dichlorobromomethane.
5 locations (WTP, NH-1, 1202, 65, FC-530)	1/29/1981	VOCs detected		CLW 441	Notes made during analysis of TTHMs indicate heavy interference and state, "You need to analyze for chlorinated organics by GC/MS".
5 locations (WTP, NH-1, 1202, 65, FC-530)	2/26/1981	VOCs detected		CLW 443	Notes made during analysis of TTHMs state, "Water highly contaminated with other chlorinated hydrocarbons (solvents)!"
5 locations (not specified, but assumed to be WTP, NH-1, 1202, 65, FC-530)	April 1981 to April 1982	VOCs detected		CLW 444, CLW 446, CLW 543	Data for three rounds of TTHM sampling and analysis are available from this time period (sample collection dates are 4/14/81, 6/11/81, and 4/26/82). No comments regarding interference are made on these data reports, but CLW 543 (4/26/82) notes that reported concentrations for TTHM and bromodichloromethane "represent an upper limit on the possible" concentrations.
5 locations (not specified, but assumed to be WTP, NH-1, 1202, 65, FC-530)	6/1/1982	VOCs detected		CLW 566	Notes made during analysis of TTHMs indicate interference by an unknown compound.
5 locations (not specified, but assumed to be WTP, NH-1, 1202, 65, FC-530)	June and July 1982	VOCs detected		CLW 580, CLW 596	Data for two rounds of sampling and analyses for TTHM are available from this time period (sample collection dates are 6/28/82 and 7/28/82). No comments regarding interference are made on these data reports, but notes indicate that reported concentrations for TTHM and bromodichloromethane "represent an upper limit on the possible" concentrations.

Summary of Analytical Data for Groundwater at Camp Lejeune

Sample Location/Source	Sample Date	Contaminant Concentration* (ug/L)		Document(s) in which data were reported*	Notes
		PCE	TCE		
Bldg. 1202, Men's Room Sink	12/2/1982	VOCs detected		CLW 694	Notes made during analysis of TTHMs state, "All samples from this site show contamination from Trichloroethylene and Tetrachloroethylene."
Bldg. 1202, Men's Room Sink	8/29/1983	VOCs detected		CLW 952	Notes made during analysis of TTHMs indicate that all samples from this site exhibit contamination from both TCE and PCE.
Bldg. 20, Water Plant at Pump	12/2/1982	VOCs detected		CLW 694	Notes made during analysis of TTHMs state, "All samples from this site show contamination from Trichloroethylene and Tetrachloroethylene."
Bldg. 20, Water Plant at Pump	8/29/1983	VOCs detected		CLW 952	Notes made during analysis of TTHMs indicate that all samples from this site exhibit contamination from both TCE and PCE.
Bldg. 65, Quality Control Lab, Room 220 Sink	12/2/1982	VOCs detected		CLW 694	Notes made during analysis of TTHMs state, "All samples from this site show contamination from Trichloroethylene and Tetrachloroethylene."
Bldg. 65, Quality Control Lab, Room 220 Sink	8/29/1983	VOCs detected		CLW 952	Notes made during analysis of TTHMs indicate that all samples from this site exhibit contamination from both TCE and PCE.
Bldg 65	2/22/1985		1.0	CLW 1426	First several characters of sample location are cut off; assumed to be Bldg 65 at Hadnot Point
Bldg. FC-530, Laundry Room Sink, First Floor	12/2/1982	VOCs detected		CLW 694	Notes made during analysis of TTHMs state, "All samples from this site show contamination from Trichloroethylene and Tetrachloroethylene."
Bldg. FC-530, Laundry Room Sink, First Floor	8/29/1983	VOCs detected		CLW 952	Notes made during analysis of TTHMs indicate that all samples from this site exhibit contamination from both TCE and PCE.
Bldg. NH-1, Emergency Room Sink	12/2/1982	VOCs detected		CLW 694	Notes made during analysis of TTHMs state, "All samples from this site show contamination from Trichloroethylene and Tetrachloroethylene."
Bldg. NH-1, Emergency Room Sink	8/29/1983	VOCs detected		CLW 952	Notes made during analysis of TTHMs indicate that all samples from this site exhibit contamination from both TCE and PCE.
Distribution Point, Bldg FC-530	7/28/1982	1		CLW 592, CLW 606, 171 AR DENR 051101	This sample was analyzed qualititively for TCE; concentrations were similar to other detections in Hadnot Point samples (19-21 ug/L). PCE concentration is reported as 1 ug/L in CLW 592 and 171 AR DENR 051101, but is reported as 100 ug/L in CLW 606.
Distribution Point, Bldg NH-1	5/27/1982	15	**1400**	CLW 592, CLW 606	
FC-540 (Raw water)	12/19/1984	<10	1.2	CLW 1054, CLW 4546	
Bldg. 20 (Man-hole) Raw	7/27/1982	<1	19	CLW 592, CLW 606	The sample date reported in CLW 606 is 7/28/82.
Bldg. 20, Treated	7/27/1982	<1	21	CLW 592, CLW 606	These data are also reported in CLW 606, but the sample date is listed as 7/28/82.
Bldg. 20, Raw	12/4/1984	<10	46	CLW 1051, CLW 1054, CLW 4546, CLW 4558	In CLW 1051, the TCE concentration is reported as 0.047 mg/l. CLW 4558 labels this sample as "Bldg 20 Raw".
Bldg. 20, Treated	12/4/1984	3.9	**196**	CLW 1051, CLW 1054, CLW 4546, CLW 4558	CLW 4558 labels this sample as "Bldg 20 Trtd."

Summary of Analytical Data for Groundwater at Camp Lejeune

Sample Location/Source	Sample Date	Contaminant Concentration* (ug/L)		Document(s) in which data were reported*	Notes
		PCE	TCE		
Bldg. 20, Raw	12/10/1984		2.3	CLW 4558	
Bldg. 20, Treated	12/10/1984	<10	2.3	CLW 1054, CLW 4546	
Bldg. 20, Raw	12/13/1984	<10	<10	CLW 4546	
Bldg. 20, Raw	12/14/1984	<10	<10	CLW 4546	
Bldg. 20, Raw	12/15/1984	<10	<10	CLW 4546	
Bldg. 20, Raw	12/16/1984	<10	<10	CLW 4546	
Bldg. 20, Raw	12/17/1984	<10	<10	CLW 4546	
Bldg. 20, Raw	12/18/1984	<10	<10	CLW 4546	
Bldg. 20, Raw	12/19/1984	<10	<10	CLW 4546	
Bldg. 20	1/31/1985		**900**	CLW 4546, CLW 4558	
Bldg. 20, Treated	2/5/1985	ND	**429**	CLW 4708, CLW 4709	CLW 4708 and 4709 are handwritten notes; there are a few discrepancies between data reported in CLW 4708 and those reported in CLW 4709. CLW 4546 labels this sample as "HP".
Bldg. 20 Filter Eff. #1	2/7/1985		<2.0	CLW 1426, CLW 4546, CLW 4516	Samples analysed by purge and trap method utilizing Hall detector in the halogen mode.
Bldg. 20 Filter Eff. #2	2/7/1985		3.4	CLW 1426, CLW 4546, CLW 4516	Samples analysed by purge and trap method utilizing Hall detector in the halogen mode.
Bldg. 20 Influent	2/7/1985		<2.0	CLW 1426, CLW 4546, CLW 4516	Samples analysed by purge and trap method utilizing Hall detector in the halogen mode.
Bldg. 20 Reservoir Finished Water	2/7/1985		16.8	CLW 1426, CLW 4546, CLW 4516	Samples analysed by purge and trap method utilizing Hall detector in the halogen mode.
Bldg. 20 Treated	4/24/1985	<10	<10	CLW 4787	
Treated water at plant	7/15/1985	<10	<10	CLW 1283	
Well 601	12/4/1984	5.0	**210**	CLW 1051, CLW 1054, CLW 1917, CLW 4546, CLW 4558, CLW 4976	TCE concentration is reported as 207 ug/L in CLW 1051, CLW 1054, and CLW 4558.
Well 601	12/10/1984	4.4	**230**	CLW 1917, CLW 1054, CLW 4546, CLW 4558, CLW 4976	PCE is reported to be non-detect in CLW 4546.
Well 601	1/16/1985	<10	26	CLW 1917, CLW 4546, CLW 4558, CLW 4976	
Well 601	2/4/1985	1.5	38	CLW 1917	
Well 601	11/12/1986	ND	ND	CLW 1917	
Well 602	July 1984			CLW 4976	

Summary of Analytical Data for Groundwater at Camp Lejeune

Sample Location/Source	Sample Date	Contaminant Concentration* (ug/L)		Document(s) in which data were reported*	Notes
		PCE	TCE		
Well 602	11/30/1984	**24**	**1600**	CLW 1917, CLW 1054, CLW 4546, CLW 4558, CLW 1089, CLW 4976	PCE concentration is reported as 1,1,2,2-tetrachloroethane in CLW 1054 and 1089.
Well 602	12/10/1984	<10	**540**	CLW 1054, CLW 1917, CLW 4546, CLW 4976	
Well 602	12/13/1984	3.2	**300/340**	CLW 1093, CLW 1917, CLW 1054, CLW 4558, CLW 4976	PCE concentration is reported as ND in CLW 1917.
Well 602	11/12/1986	ND	2.2	CLW 1917, CLW 4976	
Well 603	12/4/1984	ND	4.6	CLW 1051, CLW 1054, CLW 1917, CLW 4546	TCE is reported to be non-detect in CLW 4546.
Well 603	12/10/1984	<10	<10	CLW 1917, CLW 4546	
Well 603	1/16/1985		ND	CLW 1917, CLW 4546	CLW 4546 indicates, "None detected."
Well 603	13&17 Jan 1986		ND	CLW 1917	
Well 603	4-6 Nov 1986		ND	CLW 1917	
Well 605	12/10/1984		ND	CLW 1054	No peaks. The detection limit is hard to read, but may be 10 ppb.
Well 606	1/16/1985	VOCs not detected		CLW 1650, CLW 4546	
Well 606	Jan 1985	VOCs not detected		CLW 1650	
Well 606	Nov 1986	VOCs not detected		CLW 1650	
Well 607	Nov 1986	VOCs not detected		CLW 1650	
Well 608	12/4/1984	<10	**110**	CLW 1051, CLW 1054, CLW 1917, CLW 4546, CLW 4558, CLW 4976	TCE concentration is reported to be 11.0 ppb in CLW 4546.
Well 608	12/10/1984	<10	13	CLW 1054, CLW 1917, CLW 4546, CLW 4558, CLW 4976	
Well 608	2/4/1985		9	CLW 1917	
Well 608	11/12/1986		**66**	CLW 1917, CLW 4976	
Well 609	1/16/1985	VOCs not detected		CLW 1650, CLW 4546	
Well 609	Jan 1986	VOCs not detected		CLW 1650	
Well 609	Nov 1986	VOCs not detected		CLW 1650	
Well 610	Feb 1985	VOCs not detected		CLW 1650	
Well 610	Jan 1986	VOCs not detected		CLW 1650	
Well 610	Nov 1986	VOCs not detected		CLW 1650	
Well 610	10/1/1992		37	CLW 3256	
Well 611	1/16/1985	VOCs not detected		CLW 1650, CLW 4546	
Well 613	1/16/1985	VOCs not detected		CLW 1650, CLW 4546	
Well 613	Jan 1986	VOCs not detected		CLW 1650	
Well 613	Nov 1986	VOCs not detected		CLW 1650	

Summary of Analytical Data for Groundwater at Camp Lejeune

Sample Location/Source	Sample Date	Contaminant Concentration* (ug/L)		Document(s) in which data were reported*	Notes
		PCE	TCE		
Well 614	1/16/1985	VOCs not detected		CLW 1650, CLW 4546	
Well 616	1/16/1985	VOCs not detected		CLW 1650, CLW 4546	
Well 616	Jan 1986	VOCs not detected		CLW 1650	
Well 616	Nov 1986	VOCs not detected		CLW 1650	
Well 620	1/16/1985	VOCs not detected		CLW 1650, CLW 4546	
Well 620	Jan 1986	VOCs not detected		CLW 1650	
Well 620	Nov 1986	VOCs not detected		CLW 1650	
Well 621	1/16/1985	VOCs not detected		CLW 1650, CLW 4546	
Well 622	Nov 1986	VOCs not detected		CLW 1650	
Well 627	1/16/1985	VOCs not detected		CLW 1650, CLW 4546	
Well 628	Nov 1986	VOCs not detected		CLW 1650	
Well 629	Nov 1986	VOCs not detected		CLW 1650	
Well 632	1/16/1985	VOCs not detected		CLW 1650, CLW 4546	
Well 632	Nov 1986	VOCs not detected		CLW 1650	
Well 633	1/16/1985	VOCs not detected		CLW 4546	
Well 634	12/4/1984	<10	<10	CLW 1917, CLW 1054, CLW 4546, CLW 4976	
Well 634	12/10/1984	<10	<10	CLW 1917, CLW 4546, CLW 4976	
Well 634	1/16/1985	10	**1300**	CLW 1917, CLW 4546, CLW 4558, CLW 4976	CLW 4546 and 4558 indicate TCE concentration is 1300 ug/L; CLW 1917 indicates TCE concentration is 10 ug/L, and methylene chloride concentration is 1300 ug/L.
Well 634	11/12/1986		ND	CLW 1917, CLW 4976	
Well 635	1/16/1985	VOCs not detected		CLW 1650, CLW 4546	
Well 635	Jan 1986	VOCs not detected		CLW 1650	
Well 635	Nov 1986	VOCs not detected		CLW 1650	
Well 636	1/16/1985	VOCs not detected		CLW 1917, CLW 4546	
Well 636	13&17 Jan 1986	VOCs not detected		CLW 1917	
Well 637	12/4/1984	<10	<10	CLW 1054, CLW 4546, CLW 4976	
Well 637	12/10/1984	<10	<10	CLW 4546, CLW 4976	
Well 637	1/16/1985	VOCs not detected		CLW 4546, CLW 4976	
Well 638	1/16/1985	VOCs not detected		CLW 1650, CLW 4546	
Well 638	Jan 1986	VOCs not detected		CLW 1650	
Well 638	Nov 1986	VOCs not detected		CLW 1650	
Well 639 (Old and New)	1/16/1985	VOCs not detected		CLW 1650, CLW 4546	
Well 639 (Old and New)	Jan 1986	VOCs not detected		CLW 1650	
Well 639 (Old and New)	Nov 1986	VOCs not detected		CLW 1650	
Well 640	1/16/1985	VOCs not detected		CLW 1650, CLW 4546	

Summary of Analytical Data for Groundwater at Camp Lejeune

Sample Location/Source	Sample Date	Contaminant Concentration* (ug/L)		Document(s) in which data were reported*	Notes
		PCE	TCE		
Well 640	Jan 1986	VOCs not detected		CLW 1650	
Well 640	Nov 1986	VOCs not detected		CLW 1650	
Well 641	1/16/1985	VOCs not detected		CLW 1650, CLW 4546	
Well 641	Jan 1986	VOCs not detected		CLW 1650	
Well 642	12/4/1984	<10	<10	CLW 1054, CLW 4546	
Well 642	12/10/1984	<10	<10	CLW 4546	
Well 642	1/16/1985	VOCs not detected		CLW 4546	
Well 643	1/16/1985	VOCs not detected		CLW 1650, CLW 4546	
Well 643	Nov 1986	VOCs not detected		CLW 1650	
Well 644	1/16/1985	VOCs not detected		CLW 1650, CLW 4546	
Well 644	Nov 1986	VOCs not detected		CLW 1650	
Well 646	1/16/1985	VOCs not detected		CLW 1650, CLW 4546	
Well 647	1/16/1985	VOCs not detected		CLW 1650, CLW 4546	
Well 647	Nov 1986	VOCs not detected		CLW 1650	
Well 648	1/16/1985	VOCs not detected		CLW 1650, CLW 4546	
Well 648	Nov 1986	VOCs not detected		CLW 1650	
Well 649	Feb 1985	VOCs not detected		CLW 1650	
Well 649	Nov 1986	VOCs not detected		CLW 1650	
Well 650	1/16/1985	VOCs not detected		CLW 1650, CLW 4546	
Well 650	Nov 1986	VOCs not detected		CLW 1650	
Well 651	1/16/1985	**386**	**3200**	CLW 1917, CLW 4546, CLW 4558	
Well 651	2/4/1985	**400/397**	**18,900/17,600**	CLW 1917, CLW 4546, 52 R USMC 08021985	Split sample.
Well 651	11/12/1986	**45**	32	CLW 1917	
Well 652	1/16/1985	<10	9.0	CLW 1917, CLW 4546	
Well 652	11/12/1986		ND	CLW 1917	
Well 653	1/16/1985	<10	5.5	CLW 1917, CLW 4546	
Well 653	11/12/1986		2.6	CLW 1917	
Well 654	Feb 1985	VOCs not detected		CLW 1650	
Well 654	Jan 1986	VOCs not detected		CLW 1650	
Well 654	Nov 1986	VOCs not detected		CLW 1650	
Well 655	1/16/1985	VOCs not detected		CLW 1650, CLW 4546	
Well 655	Jan 1986	VOCs not detected		CLW 1650	
Well 655	Nov 1986	VOCs not detected		CLW 1650	
Well 660	6/6/1985		2.6	CLW 3256	
Well 661	Jan 1986	VOCs not detected		CLW 1650	
Well 661	Nov 1986	VOCs not detected		CLW 1650	
Well 662	Jan 1986	VOCs not detected		CLW 1650	
Well 662	Nov 1986	VOCs not detected		CLW 1650	

Summary of Analytical Data for Groundwater at Camp Lejeune

Sample Location/Source	Sample Date	Contaminant Concentration* (ug/L)		Document(s) in which data were reported*	Notes
		PCE	TCE		
LCH 4006	4/22/1985	<10	<10	CLW 1650, CLW 4787	
LCH 4007	1/16/1985	VOCs not detected		CLW 1650, CLW 4546	
LCH 4007	Jan 1986	VOCs not detected		CLW 1650	
LCH 4007	1/12/1998			CLW 3256	
LCH 4009	Jan 1986	VOCs not detected		CLW 1650	
LCH 4009	Nov 1986	VOCs not detected		CLW 1650	
HOLCOMB BOULEVARD WATER SYSTEM					
Bldg. 670 Reservoir	1/29/1985		8.2	CLW 1426, CLW 4546	House tap sample; treated with chlorination, filtering, and lime. No gasoline hydrocarbons indicated by purge and trap analysis. CLW 4546 identifies this sample location as "HB After Reservoir".
Bldg. 670 Treated Before Reservoir	1/29/1985		**339.8**	CLW 1426, CLW 4546	House tap sample; treated with chlorination, filtering, and lime. No gasoline hydrocarbons indicated by purge and trap analysis.
Bldg. 670 Bottom	1/31/1985		24.1	CLW 4546	
Bldg. 670 Middle	1/31/1985		25.8	CLW 4546	
Bldg. 670 Top	1/31/1985		26.8	CLW 4546	
Bldg. 670 Filter #1	2/5/1985		2.8	CLW 4708, CLW 4709	These data are from handwritten notes.
Bldg. 670 Filter #2	2/5/1985		1.5	CLW 4708, CLW 4709	These data are from handwritten notes.
Bldg 670 Reservoir Finished Water	2/7/1985		<2.0	CLW 4546, CLW 4516	
Bldg. 670 Filter Eff. #1	2/7/1985		<2.0	CLW 4546, CLW 4516	
Bldg. 670 Filter Eff. #2	2/7/1985		<2.0	CLW 4546, CLW 4516	
Bldg. 670 Influent	2/7/1985		<2.0	CLW 4546, CLW 4516	
Tap Water from Berkeley Manor Elementary School (Bldg. 5400)	1/31/1985		**1148.4**	171 AR DENR 051101, CLW 4546	This location was temporarily receiving water from the Hadnot Point Water System when this sample was collected.
Bldg. 5400 Berkley Manor Elementary School Cafeteria	2/7/1985		**135.1**	CLW 1426, CLW 4546, CLW 4516	
Well 706	4/8/1998			CLW 3256	
TARAWA TERRACE WATER SYSTEM					
Bldg TT-35, Sewage Plant	4/19/1982	VOCs detected		CLW 534, CLW 542	Office Sink
Bldg TT-35, Sewage Plant	5/19/1982				Office Sink
Bldg TT-35, Sewage Plant	5/28/1982			CLW 567	Office Sink, No indications of VOC interference
Bldg TT-35, Sewage Plant	6/24/1982			CLW 580, 581	Office Sink, No indications of VOC interference
Bldg TT-35, Sewage Plant	11/29/1982	PCE		CLW 688, 692, 693	Office Sink, Lab report: "All samples from this site show contamination from Tetrachlorethylene. "
Bldg TT-35, Sewage Plant	8/29/1983	PCE		CLW 952	Notes made during analysis of TTHMs state, "all samples from this site exhibit contamination from Tetrachloroethylene."
Bldg TT-48, TT Elem School II	4/19/1982	VOCs detected		CLW 534, CLW 542	Men's Restroom across Office
Bldg TT-48, TT Elem School II	5/19/1982				Men's Restroom across Office

Summary of Analytical Data for Groundwater at Camp Lejeune

Sample Location/Source	Sample Date	Contaminant Concentration* (ug/L)		Document(s) in which data were reported*	Notes
		PCE	TCE		
Bldg TT-48, TT Elem School II	5/28/1982			CLW 567	Men's Restroom across Office, No indications of VOC interference
Bldg TT-48, TT Elem School II	6/24/1982			CLW 580, 581	Men's Restroom across Office, No indications of VOC interference
Bldg TT-48, TT Elem School II	11/29/1982	PCE		CLW 688, 692, 693	Men's Restroom across Office, Lab report: "All samples from this site show contamination from Tetrachlorethylene. "
Bldg TT-48, TT Elem School II	8/29/1983	PCE		CLW 952	Notes made during analysis of TTHMs state, "all samples from this site exhibit contamination from Tetrachloroethylene."
Bldg TT-60, TT Elem School 1	4/19/1982	VOCs detected		CLW 534, CLW 542	Main Hall Men's Restroom Sink
Bldg TT-60, TT Elem School 1	5/19/1982				Main Hall Men's Restroom Sink
Bldg TT-60, TT Elem School 1	5/28/1982			CLW 567	Main Hall Men's Restroom Sink, No indications of VOC interference
Bldg TT-60, TT Elem School 1	6/24/1982			CLW 580, 581	Main Hall Men's Restroom Sink, No indications of VOC interference
Bldg TT-60, TT Elem School 1	11/29/1982	PCE		CLW 688, 692, 693	Main Hall Men's Restroom Sink, Lab report: "All samples from this site show contamination from Tetrachlorethylene. "
Bldg TT-60, TT Elem School 1	8/29/1983	PCE		CLW 952	Notes made during analysis of TTHMs state, "all samples from this site exhibit contamination from Tetrachloroethylene."
Bldg. STT-38, Water Plant, Raw	7/28/1982	76		CLW 590, 592, 593, 606, 607	
Bldg. STT-39A Water Plant, Treated	7/28/1982	82		CLW 590, 592, 593, 606, 607	
Bldg. STT-39A, Water Plant	4/19/1982	VOCs detected		CLW 534, CLW 542	1st Pump
Bldg. STT-39A, Water Plant	5/19/1982				1st Pump
Bldg. STT-39A, Water Plant	5/28/1982			CLW 567	1st Pump, No indications of VOC interference
Bldg. STT-39A, Water Plant	6/24/1982			CLW 580, 581	1st Pump, No indications of VOC interference
Bldg. STT-39A, Water Plant	11/29/1982	PCE		CLW 688, 692, 693	1st Pump, Lab report: "All samples from this site show contamination from Tetrachlorethylene. "
Bldg. STT-39A, Water Plant	8/29/1983	PCE		CLW 952	Notes made during analysis of TTHMs state, "all samples from this site exhibit contamination from Tetrachloroethylene."
Bldg. TT-2453, TT Exchange Gas Station	4/19/1982	VOCs detected		CLW 534, CLW 542	Gas Station Ladies Room
Bldg. TT-2453, TT Exchange Gas Station	5/19/1982				Gas Station Ladies Room
Bldg. TT-2453, TT Exchange Gas Station	5/28/1982	80		CLW 567, 592, 593, 606, 607	Gas Station Ladies Room, No initial indication of VOC interference, resampling in July showed 80
Bldg. TT-2453, TT Exchange Gas Station	6/24/1982			CLW 580, 581	Gas Station Ladies Room, No initial indication of VOC interference
Bldg. TT-2453, TT Exchange Gas Station	7/28/1982	104		CLW 590, 592, 593, 606, 607	
Bldg. TT-2453, TT Exchange Gas Station	11/29/1982	PCE		CLW 688, 692, 693	Gas Station Ladies Room, Lab report: "All samples from this site show contamination from Tetrachlorethylene. "
Bldg. TT-2453, TT Exchange Gas Station	8/29/1983	PCE		CLW 952	Notes made during analysis of TTHMs state, "all samples from this site exhibit contamination from Tetrachloroethylene."

Summary of Analytical Data for Groundwater at Camp Lejeune

Sample Location/Source	Sample Date	Contaminant Concentration* (ug/L)		Document(s) in which data were reported*	Notes
		PCE	TCE		
Tap Water	2/5/1985	**215**	8.1	CLW 2979, 171 AR DENR 051101, CLW 4708, CLW 4709, CLW 4546, CLW 5094, 52 R USMC 08021985	None of the documents in which these data were presented is the original source; CLW 2979 and 5094 indicate that the PCE concentration for this sample is 80 ug/L. CLW 4709 indicates that the TCE concentration is 8.0 ug/L, and CLW 4546 indicates that the TCE concentration is 12 ug/L. CLW 4708 and 4709 identify this sample as TT38; CLW 4546 identifies this sample as "TT".
TT Plant	2/12/1985	ND	ND	CLW 4546, CLW 5094, 52 R USMC 08021985	
TT Treated	2/19/1985	ND	ND	CLW 4546, CLW 5094, 52 R USMC 08021985, CLW 1124	This sample was analyzed by both the State of NC and by JTC Environmental Consultants. PCE and TCE were not detected by either lab (NC detection limit was 2.0 ug/L).
TT Treated	4/22/1985	1.0	<10	CLW 4787, CLW 1355	PCE was detected below the method detection limit.
TT	4/23/1985	<10	<10	CLW 4787	The lab labeled this sample as "Tarawa Terrace".
TT Finished Water (W/O New Well)	3/11/1985	<10	<10	CLW 1475, CLW 1182, CLW 1183, CLW 4558, CLW 4707	This sample was analyzed by both the State of NC and by JTC Environmental Consultants (results are presented as (NC/JTC). PCE, TCE, and DCE were not detected by either lab. CLW 1182 and CLW 4707 (NC lab results) indicate that reporting values are 2 ug/L.
TT Finished Water (Downstream of Reservoir at 24 hours)	3/12/1985	6.6/8.9	<10	CLW 1475, CLW 1182, CLW 1183, CLW 4558, CLW 4707	This sample was analyzed by both the State of NC and by JTC Environmental Consultants (results are presented as NC/JTC). TCE was not detected by either lab. CLW 1182 and CLW 4707 (NC lab results) indicate that reporting values are 2 ug/L.
TT Finished Water (Upstream of Reservoir at 24 hours)	3/12/1985	21.3/20	<10/1.1	CLW 1475, CLW 1182, CLW 1183, CLW 4558, CLW 4707	This sample was analyzed by both the State of NC and by JTC Environmental Consultants (results are presented as (NC/JTC). TCE was detected by JTC at concentrations below the method detection limit. CLW 1182 and CLW 4707 (NC lab results) indicate that reporting values are 2 ug/L.
TT Treated	6/17/1985			CLW 4806	Volatile organic analysis was conducted; only dichlorobromomethane and dibromochloromethane were detected.
TT New	6/17/1985			CLW 4806	No chlorinated compounds detected.
TT381327	6/24/1985			CLW 4806	Volatile organic analysis was conducted; only dichlorobromomethane and dibromochloromethane were detected.
TT261340	6/24/1985	**1160**	24	CLW 4806	
TT-Treated	7/1/1985			CLW 1255	Results are reported as "None" for VOCs; it's unclear whether this indicates that no analysis was performed or that VOCs were not detected
TT-Treated	7/8/1985			CLW 1255	Results are reported as "None" for VOCs; it's unclear whether this indicates that no analysis was performed or that VOCs were not detected
TT-Treated	7/15/1985	<10	<10	CLW 1283	
Well TT-23/ TT New Well	Jul-84		37	CLW 2979, CLW 5094	

Summary of Analytical Data for Groundwater at Camp Lejeune

Sample Location/Source	Sample Date	Contaminant Concentration* (ug/L)		Document(s) in which data were reported*	Notes
		PCE	TCE		
Well TT-23/ TT New Well	1/16/1985	**132**	<10	CLW 1183, CLW 4546, CLW 4558, CLW 5082, 171 AR DENR 051101, 52 R USMC 08021985, CLW 1557	CLW 4546 and CLW 5082 indicate that TCE was detected at 5.8 ug/L. CLW 4546 indicates that this sample was collected on 1/23/1985.
Well TT-23/ TT New Well	2/12/1985	**37**	1.8	CLW 1183, CLW 4546, CLW 4558, CLW 5082	CLW 1183 and CLW 4558 indicate that TCE was not detected at a detection limit of 10 ug/L.
Well TT-23/ TT New Well	2/19/1985	**26.17/<10**	53.53/<10	CLW 1475, CLW 1183, CLW 1426, CLW 4546, CLW 4558, CLW 5082, CLW 1124, CLW 1557	This sample was analyzed by both the State of NC and by JTC Environmental Consultants (results are presented as (NC/JTC).
Well TT-23/ TT New Well (Pumped 2 hours)	3/11/1985	14.9/16	<10/1.3	CLW 1475, CLW 1182, CLW 1183, CLW 4707	This sample was analyzed by both the State of NC and by JTC Environmental Consultants (results are presented as (NC/JTC). TCE was detected by JTC at concentrations below the method detection limit. CLW 1182 and CLW 4707 (NC lab results) indicate that reporting values are 2 ug/L.
Well TT-23/ TT New Well (Pumped 24 hours)	3/12/1985	**40.6/48**	<10/2.4	CLW 1475, CLW 1182, CLW 1183, CLW 4558, CLW 4707, CLW 1557	This sample was analyzed by both the State of NC and by JTC Environmental Consultants (results are presented as (NC/JTC). TCE was not detected by either lab. CLW 1182 and CLW 4707 (NC lab results) indicate that reporting values are 2 ug/L.
Well TT-23/ TT New Well	6/17/1985	VOCs not detected		CLW 4806	
Well TT-23/ TT New Well	9/25/1985	**4**	0.2	CLW 1557, 57 M DENR 050686, CLW 1557	Note that these are both secondary source documents. CLW 1557 reported the TCE concentration as ND.
Well TT-23/ TT New Well	1985		53	14 R DENR 300490, 21 R DENR 000992	Concentration is highest reported from multiple samplings and analyses in 1985. Source: Shriver, 1985.
Well TT-25	Jul-84		trace	CLW 2979, CLW 5094	Trace amounts were detected in this well.
Well TT-25	1/16/1985	VOCs not detected		CLW 1183, CLW 4546, CLW 4558, CLW 5082	CLW 4546 indicates this sample was collected on 1/23/1985.
Well TT-25	9/25/1985	0.43	ND	CLW 1557, 57 M DENR 050686, 21 R DENR 000992	Note that these are all secondary source documents.
Well TT-25	1985	0.43		14 R DENR 300490	Concentration is highest reported from multiple samplings and analyses in 1985. Source: Shiver, 1985.
Well TT-26	Jul-84		3.9	CLW 2979, CLW 5094	Tap water was tested.
Well TT-26	1/16/1985	**1580**	57	CLW 1183, 171 AR DENR 051101, CLW 4546, CLW 4558, CLW 5082, 52 R USMC 08021985, CLW 1557, 21 R DENR 000992	CLW 4546 indicates that this sample was collected on 1/23/1985, and PCE was detected at a concentration of 158 ug/L.

Summary of Analytical Data for Groundwater at Camp Lejeune

Sample Location/Source	Sample Date	Contaminant Concentration* (ug/L)		Document(s) in which data were reported*	Notes
		PCE	TCE		
Well TT-26	2/12/1985	3.8	<10	CLW 1183, CLW 4546, CLW 4558, CLW 5082	CLW 1183 and CLW 4558 indicate that PCE was not detected at a detection limit of 10 ug/L.
Well TT-26	2/19/1985	**55.17/64**	3.91/4.1	CLW 1475, CLW 1183, CLW 1426, CLW 4546, CLW 4558, CLW 5082, CLW 1124, CLW 1557	This sample was analyzed by both the State of NC and by JTC Environmental Consultants (results are presented as NC/JTC). CLW 1183 and CLW 4558 indicate that TCE was not detected in this sample.
Well TT-26	4/9/1985	**630**	18	CLW 1232, CLW 1244, CLW 1426, CLW 1557	Lab Notes: "Compounds were identified by matching to library mass spectra. There were not matched to standards. Concentrations were estimated as a ratio to a known internal standard."
Well TT-26	6/24/1985	**1160**	24	CLW 4806	
Well TT-26	9/25/1985	**1100**	ND	CLW 1557, 57 M DENR 050686, CLW 1557	Note that these are all secondary source documents.
Well TT-30	1/16/1985	VOCs not detected		CLW 1183, CLW 4546, CLW 4558, CLW 5082	CLW 4546 indicates this sample was collected on 1/23/1985.
Well TT-31	1/16/1985	VOCs not detected		CLW 1183, CLW 4546, CLW 4558, CLW 5082	CLW 4546 indicates this sample was collected on 1/23/1985.
Well TT-32	1/16/1985	VOCs not detected		CLW 1183, CLW 4558	
Well TT-52	1/16/1985	VOCs not detected		CLW 1183, CLW 4546, CLW 4558, CLW 5082	CLW 4546 indicates this sample was collected on 1/23/1985.
Well TT-54	1/16/1985	VOCs not detected		CLW 1183, CLW 4546, CLW 4558, CLW 5082	CLW 4546 indicates this sample was collected on 1/23/1985.
Well TT-67	1/16/1985	VOCs not detected		CLW 1183, CLW 4546, CLW 5082	CLW 4546 indicates this sample was collected on 1/23/1985.

***Notes:**

PCE = tetrachloroethylene; TCE = trichloroethylene; DCE = dichloroethylene; VC = vinyl chloride; VOC = volatile organic compound; ND = not detected (detection limit not specified).

PCE long-term SNARL of 20 ug/L was published 10 Feb 1980. TCE long-term SNARL of 75 ug/L was published 26 Nov 1979. Exceedences of SNARLs are shown in bold-faced type.

Documents that appear to be original lab reports include: CLW 430, 436, 438, 441, 443, 444, 446, 543, 566, 580, 596, 694, 952, 1093, 1124, 1182, 1232, 1244, 1283, 1426, 4787, and 4806. Documents that appear to be secondary sources of data include: 14 R DENR 300490, 21 R DENR 000992, 171 AR DENR 051101, 52 R USMC 08021985, 57 M DENR, 050686, and CLW 592, 606, 1051, 1054, 1089, 1183, 1255, 1355, 1475, 1557, 1650, 1917, 2979, 3256, 4516, 4546, 4558, 4708, 4709, 5082, and 5094.

ATTACHMENT L

Pre-October 1982

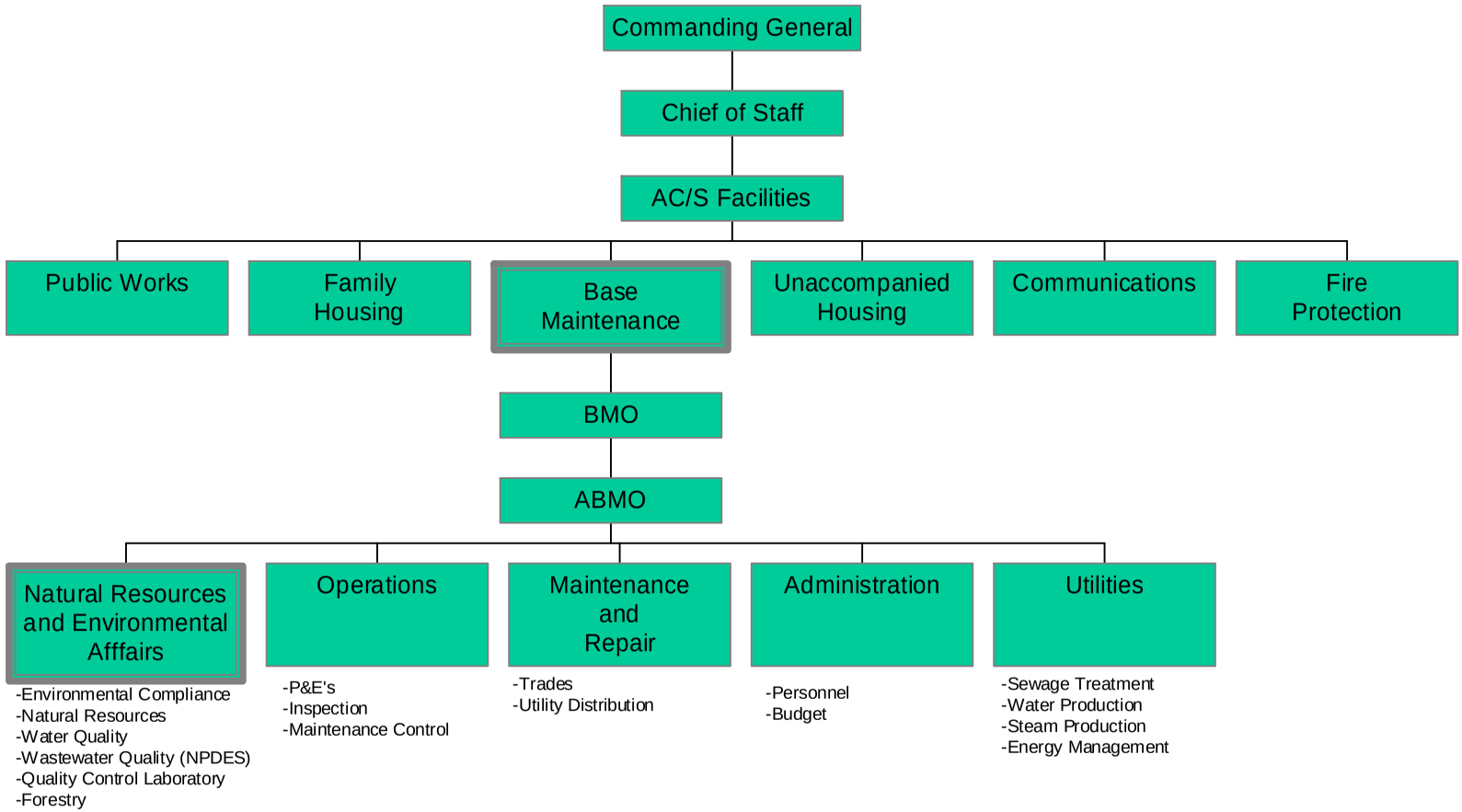

ATTACHMENT M

Post-October 1982 to 1989

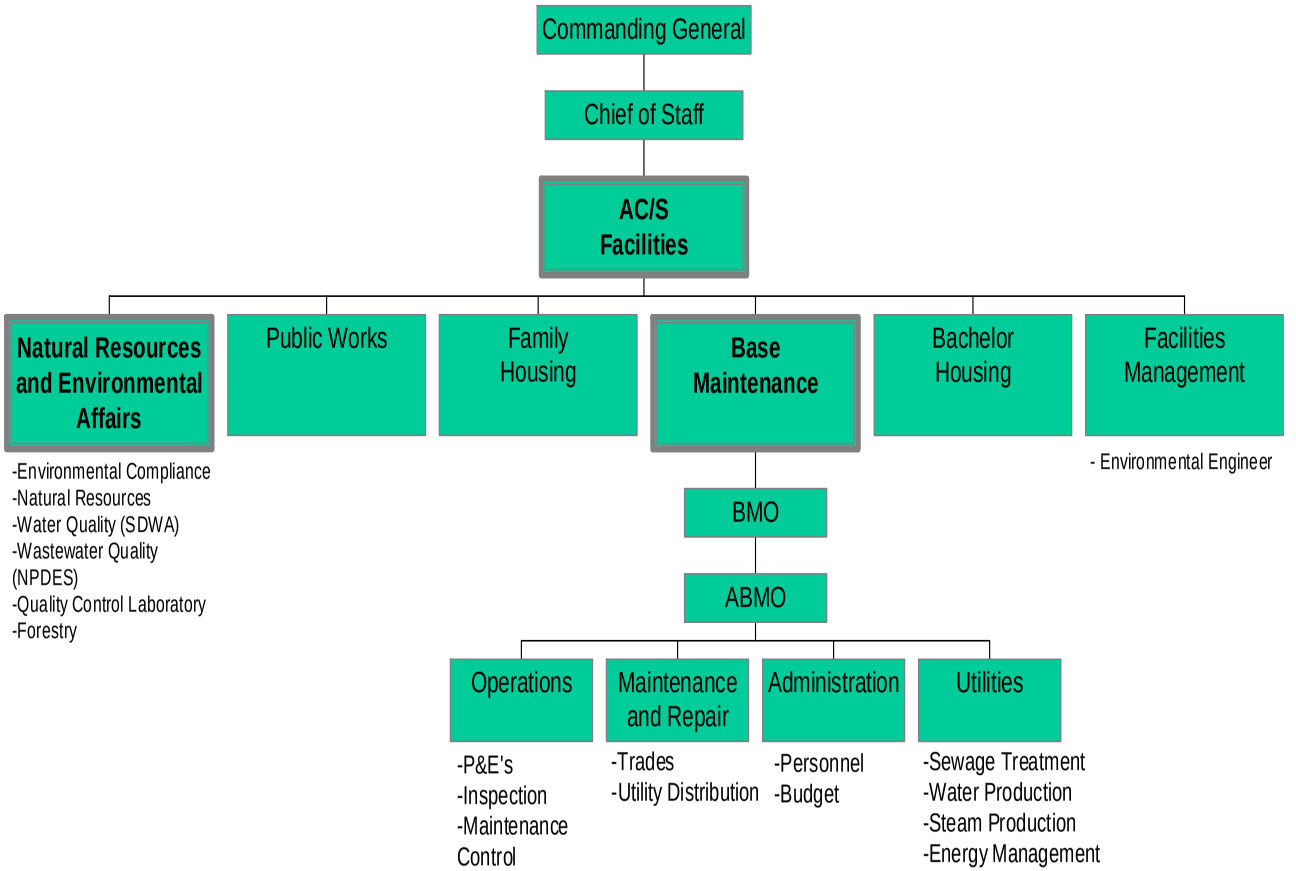

ATTACHMENT N

Organization of Preventive Medicine,
Naval Hospital and MCB, Camp Lejuene

Prior to 1984: Unknown to current staff

In 1984: Naval Hospital was a tenant command to MCB, Camp Lejeune, NC (i.e., The CO, Naval Hospital did not report to the Base CG.)

The flowchart in regards to Preventive Medicine's relationship to the Naval Hospital for 1984 is indicated below:

1984

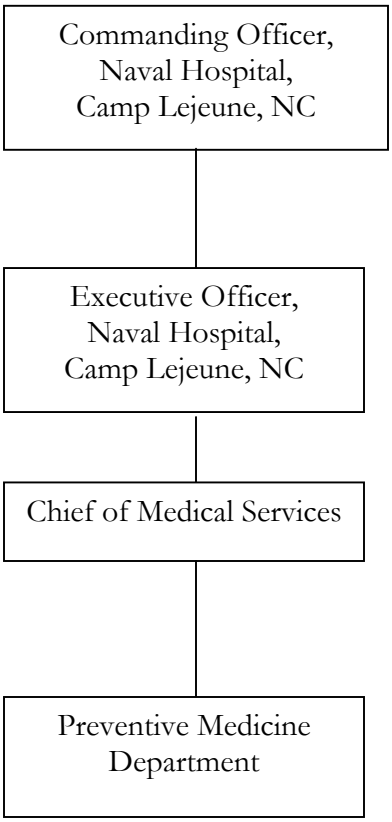

In 1989, under restructuring the CG, MCB was assigned as the Reporting Line Senior for the CO, Naval Hospital.
Current staff believes that functional responsibilities in 1984 were the same as today, even though reporting seniors have changed.

ATTACHMENT O

ACRONYMS

A-C	Asbestos-Cement
AC/S	Assistant Chief of Staff
ANPRM	Advance Notice of Proposed Rule Making
ATSDR	Agency for Toxic Substances and Disease Registry
AWWA	American Water Works Association
BUMED	Bureau of Naval Medicine
CERCLA	Comprehensive Environmental Response, Compensation and Liability Act
CHPPM	U. S. Army Center for Health Promotion and Preventive Medicine
CL	Camp Lejeune
CNS	Central Nervous System
CS	Confirmation Study
CWA	Clean Water Act
DoD	U. S. Department of Defense
EPA	U. S. Environmental Protection Agency
FOIA	Freedom of Information Act
FWPCA	Federal Water Pollution Control Act
GC/MS	Gas Chromatograph/Mass Spectrometer
HHS	U. S. Department of Health and Human Services
IARC	International Agency for Research on Cancer
IAS	Initial Assessment Study
IIMEF	Command Element, II Marine Expeditionary Force
JAWWA	Journal of the American Water Works Association
LANTDIV	Atlantic Division, Naval Facilities Engineering Command
MAGTF	Marine Air-Ground Task Force
MCB	Marine Corps Base
MCL	Maximum Contaminant Level
MEF	Marine Expeditionary Force
MGD	Million Gallons per Day
NACIP	Naval Assessment and Control of Installation Pollutants
NAS	National Academy of Sciences
NCDEM	North Carolina Division of Environmental Management
NCDENR	North Carolina Department of Environmental and Natural Resources
NCDHS	North Carolina Department of Health Services
NEHC	Navy Environmental Health Center
NIPDWR	National Interim Primary Drinking Water Regulation
NOV	Notice of Violation
NPDWR	National Primary Drinking Water Regulation
NREAD	Natural Resources and Environmental Affairs Division
PCB	Polychlorinated Biphenyl
PCE	Tetrachloroethylene (also known as Perchloroethylene)
RMCL	Recommended Maximum Contaminant Level
SDWA	Safe Drinking Water Act

SNARL	Suggested No Adverse Response Level
SOC	Synthetic Organic Chemical
TCE	Trichloroethylene
THM	Trihalomethane
TTHM	Total Trihalomethanes
USAEHA	U. S. Army Environmental Hygiene Agency
USGS	U. S. Geological Survey
USMC	U. S. Marine Corps
VOC	Volatile Organic Compound
WHO	World Health Organization

ATTACHMENT P

Agency for Toxic Substances and Disease Registry. Survey of Specific Childhood Cancers and Birth Defects Among Children whose Mothers were Pregnant while Living and USMCB Camp Lejeune, North Carolina, 1968-1985. July 2003. www.atsdr.cdc.gov/sites/lejeune/progress_report.html. Accessed September 20, 2004.

Agency for Toxic Substances and Disease Registry. U.S. Marine Corps Camp Lejeune Onslow County, NC CERCLIS, August 4, 1997. http://www.atsdr.cdc.gov/HAC/PHA/usmclejeune/clej_toc.html. Accessed September 20, 2004.

Agency for Toxic Substances and Disease Registry. Volatile Organic Compounds in Drinking Water and Adverse Pregnancy Outcomes. U.S. Marine Corps Base Camp Lejeune, NC, August 1998. www.atsdr.cdc.gov/HS/lejeune/. Accessed September 20, 2004.

Alexander, Robert E. Telephone Record. To Jim Bailey, December 6, 1984.

Allegood, Jerry. "Civilians, military investigating waste dumps at Camp Lejeune." *News and Observer (Raleigh)*, Page 29A, 15 September 1985.

Azar, Steve. Telephone Interview by Vinson Scott, July 8 and 21, 2004.

Bailey, Jim. Memorandum to Commanding General, Marine Corps Base Camp Lejeune, February 12, 1982.

Bailey, Jim. Memorandum to Commanding General, Marine Corps Base Camp Lejeune, August 26, 1981.

Bailey, Jim. Telephonic Recording. Interview by Vinson Scott, July 7 and 14, 2004.

Betz, Elizabeth. Conversation with Danny Sharpe, December 21, 1982.

Betz, Elizabeth. Memorandum to Danny Sharpe, August 19, 1982.

Betz, Elizabeth. Memorandum to Danny Sharpe, February 12, 1982.

Betz, Elizabeth. Memorandum to Danny Sharpe, May 25, 1982.

Betz, Elizabeth. Memorandum, August 31, 1982.

Calta, R.F. Memorandum, June 28, 1982.

Carson, Rachel. *Silent Spring*. Boston: Houghton Mifflin Company, 2002.

Chen, James. Telephonic Recording. Interview by Vinson Scott, July 23, 2004.

Cotruvo, J.A. and Vogt, C. "Development of revised primary drinking water regulations," *Journal American Water Works Association*, 76:11:34, 1984.

Doherty, R.E. "A history of the production and use of carbon tetrachloride, tetrachloroethylene, trichloroethylene, and 1,1,1-trichloroethane in the United States: Part 1—historical background, carbon tetrachloride and tetrachloroethylene," *Journal of Environmental Forensics*, Vol. 1, p. 69, 2000.

Doherty, R.E. "A history of the production and use of carbon tetrachloride, tetrachloroethylene, trichloroethylene, and 1,1,1-trichloroethane in the United States: Part 2—trichloroethylene and 1,1,1-trichloroethane," *Journal of Environmental Forensics*, Vol. 1, p. 83, 2000.

Dyksen, J.E. and Hess, A.F. "Alternatives for controlling organics in groundwater supplies," *Journal American Water Works Association*, 74:8:394, 1982.

Environmental Protection Agency. Comprehensive Environmental Response, Compensation, and Liability Act National Priorities List. *54 FR 41000* Washington, D.C.: U.S. Government Printing Office, 1989.

Environmental Protection Agency. Final Rule – National Primary Drinking Water Regulations; Synthetic Organic Compounds; Monitoring for Unregulated Contaminants. *52 FR 25690*. Washington, D. C.: U.S. Government Printing Office, 1987.

Environmental Protection Agency. Proposed rule – National Primary Drinking Water Regulations; Volatile Synthetic Organic Chemicals. *49 FR 24330*. Washington, D. C.: U.S. Government Printing Office, 1984

Environmental Protection Agency. Proposed Rule. *49 FR 24332*. Washington, D. C.: U.S. Government Printing Office, June 1984.

Environmental Protection Agency. Proposed Rule. *50 FR 1774*. Washington, D. C.: U.S. Government Printing Office, 1985.

Environmental Protection Agency. Safe Drinking Water Act. *40 FR 24331* Washington, D. C.: U.S. Government Printing Office, 1974.

Environmental Protection Agency. Suggested Action Guidance—Tetrachloroethylene, Criteria and Standards Division, Office of Drinking Water. Washington, D. C.: U.S. Government Printing Office, April 9, 1980.

Environmental Protection Agency. Suggested No Adverse Reaction Levels for Tetrachloroethylene, Office of Drinking Water, February 6, 1980.

Environmental Protection Agency. Suggested No Adverse Reaction Levels for Trichloroethylene, Heath Effects Branch, Criteria and Standards Division, Office of Drinking Water, November 26, 1979.

Environmental Protection Agency. Advanced Notice of Proposed Rule Making for Phase 1 VOCs. *47 FR 24330*. Washington, D. C.: U.S. Government Printing Office, March 1982.

Grainger Laboratories. Analysis of Tarawa Terrace and Hadnot Point Samples, August 10, 1982.

Grainger Laboratory, Trihalomethane analyses, April 1982.

Grainger Laboratory. Letter to Commanding General of Marine Corps Base Camp Lejeune, August 10, 1982.

Grainger Laboratory. Report of results from samples collected from the Tarawa Terrace and Hadnot Point water systems, September 16, 1983.

Grainger Laboratory. Telephone conversation with Elizabeth Betz, May 6, 1982.

Hedeman, William. Letter to Lt. Col. Daley, May 23, 1983.

Larson, C.D., et al. "Tetrachloroethylene leached from lined asbestos-cement pipe into drinking water," *Journal American Water Works Association*, 75:4:184, 1983.

Long, Donna and Shannon Brennan. "Base closes ten wells; wastes found." *Morning Star (Wilmington),* May 11, 1985.

Moser, R.H. "Discussion of tetrachloroethylene in drinking water: a water supplier's perspective," *Journal American Water Works Association*, 75:4:189, 1983.

National Academy of Science. Drinking Water and Health Vol. 1, 1977.

National Academy of Science. Drinking Water and Health, Vol. 3, 1980.

National Academy of Science. Drinking Water and Health, Vol. 5, 1983.

National Aerosol-Climate Interactions Program. Initial Assessment Study of Marine Corps Base Camp Lejeune, April 1983.

North Carolina Department of Natural Resources and Community Development. Standards for monitoring TCE and PCE in Groundwater, 1988.

North Carolina Division of Health Services. Memorandum, December 19,1984.

North Carolina Division of Health Services. Notice of Violation, December 10, 1984.

Patty, Frank A., Clayton, George D. (ed.), and Clayton, Florence E. (ed.). Patty's Industrial Hygiene and Toxicology, Indianapolis, IN: John Wiley & Sons Inc 1981.

Petura, J.C. "Trichoroethylene and methyl chloroform in groundwater: A problem assessment," *Journal American Water Works Association*, 73:4:200, 1981.

Singer et al. "Trihalomethane formation in North Carolina drinking waters," *Journal American Water Works Association*, 73:8:392, 1981.

Smith, Richard F. "Chemicals discovered in Lejeune water wells." *Daily News (Jacksonville)*, May 11, 1985, Vol. XLII No. 130, Page 1A.

Southern Testing and Research Laboratories. Report of Analysis, September 1977.

Sullivan, P.J., et al. Practical Environmental Forensics Process and Case Histories, John Wiley, New York, 2001. (PEF 2001)

Summary of December Analysis at Hadnot Point Water Treatment Plant, December 12, 1984.

The Globe (Camp Lejeune). "Camp Lejeune Water Testing Underway," December 13, 1984.

Trussell, R.R. and Trussell, A.R. "Evaluation and treatment of synthetic organics in drinking water," *Journal American Water Works Association*, 72:8:458, 1980.

U.S. Army Environmental Hygiene Agency. Trihalomethane Surveillance Report Form, October 1980.

U.S. Army Environmental Hygiene Agency. Trihalomethane Surveillance Report Form, December 1980.

U.S. Army Environmental Hygiene Agency. Trihalomethane Surveillance Report Form, January 1981.

U.S. Army Environmental Hygiene Agency. Trihalomethane Surveillance Report Form, February 1981.

U.S. Marine Corps Base Camp Lejeune Web site. http://www.lejeune.usmc.mil/mcb/. Accessed September 20, 2004.

U.S. Marine Corps Base Camp Lejeune. Study recommending demolishing TT and MP WTPs, April 4, 1979.

U.S. Marine Corps Camp Lejeune. "Notification to Residents of Tarawa Terrace," April 30, 1985.

U.S. Marine Corps Camp Lejeune. Base Commanding General press conference. "In Response to Marine Corps Base Volatile Organic Compound Problem," December 14, 1984.

U.S. Marine Corps Camp Lejeune. Press Release. Questions and Answers Relative to Wells at Camp Lejeune, December 1984 (est.)

U.S. Marine Corps. "The Charter for the Fact Finding Panel to Review Issues Surrounding the Camp Lejeune Water Supply from 1980-1985," April 2004.

U.S. Marine Corps. Water Survey Chronology of Events. July 2003. www.usmc.mil/camplejeune/clbwatersurveyinfo.nsf/. Accessed September 20, 2004.

U.S. Public Law 92-500. Federal Water Pollution Control Act Amendments of 1972. 86 Stat. 816, *et seq*, codified as amended at 33 U.S.C., Sections 1251-1387.

U.S. Public Law 93-523. Safe Drinking Water Act of 1974, codified as amended at 42 U.S.C., Section 300(f)-300(j).

Von Oesen, Henry and Associates. *Study of Two Water Plants; Tarawa Terrace – Montford Point,* April 1, 1979.

World Health Organization. Environmental Criteria, Vol. 31, 1984.

World Health Organization. Environmental Criteria, Vol. 50, 1985.